r.LiNK Video inserter

CI-RL3-NBT2
CI-RL3-NBT2-10

Compatible with

BMW vehicles F-and G-series
with NBT2 and 6.5, 7, 8.8 and 10.25inch monitor and HSD+2 plug

Mini vehicles
with NBT2 8.8inch monitor and HSD+2 plug

example

Video-inserter for one rear-view camera
and two additional video inputs

Product features

- **Video-inserter for factory-infotainment systems**
- **CVBS Input for one rear-view camera**
- **2 CVBS Video-inputs for after-market Video sources (e.g. DVD-Player, DVB-T Tuner)**
- **Automatic switching to rear-view camera input on engagement of the reverse gear**
- **Activatable parking guide lines for rear-view camera (not available for all vehicles)**
- **Video-in-motion (ONLY for connected video-sources)**
- **Video-inputs NTSC and PAL compatible**

Contents

Legal Information

By law, watching moving pictures while driving is prohibited, the driver must not be distracted. We do not accept any liability for material damage or personal injury resulting, directly or indirectly, from installation or operation of this product. Apart from using this product in an unmoved vehicle, it should only be used to display fixed menus or rear-view-camera video when the vehicle is moving (for example the MP3 menu for DVD upgrades).

Changes/updates of the vehicle's software can cause malfunctions of the interface. Up to one year after purchase we offer free software-updates for our interfaces. To receive a free update, the interface has to be sent in at own cost. Wages for de-and reinstallation and other expenditures involved with the software-updates will not be refunded.

1. Prior to installation

Read the manual prior to installation. Technical knowledge is necessary for installation. The video interface's place of installation must be free of moisture and away from heat sources.

Before the final installation in the vehicle of the video sources, we recommend a test-run to ensure the compatibility of vehicle and interface. Due to changes in the production of the vehicle manufacturer there's always a possibility of incompatibility.

1.1. Delivery contents

Take down the serial number of the interface and store this manual for support purposes: _____

1.2. Checking the compatibility of vehicle and accessories

Requirements

Brand	Compatible vehicles for RL2-NBT2	Compatible systems
BMW	All F-series and G-series vehicles from approx. 07/2017 (touch and non-touch monitor)	Radios, S6UNA Navigation S606A Business Navigation - F+G-series – **with 6.5inch or 7inch monitor**
	All F-series vehicles from approx 05/2016 and all G-series vehicles with 8.8inch monitor (touch and non-touch monitor)	S609A Professional Navigation or S6UPA Navigation Plus - NBT2 EVO - F+G series - **8.8inch monitor ONLY** (with new main menu)
Mini	from about 2016/2017	609 Professional Navigation NBT2 Evo - **8.8inch monitor** (new main menu)

Brand	Compatible vehicles for RL2-NBT2-10	Navisystem
BMW	All F-series and G-series vehicles from approx. 05/2016 with 10.25inch monitor (touch and non-touch monitor) All G-series vehicles with 10.25inch monitor (touch and non-touch monitor)	S609A Professional Navigation or S6UPA Navigation Plus - NBT2 EVO - F+G-series - **ONLY 10.25inch monitors**

Limitations

Video only — The interface inserts ONLY video signals into the infotainment. For inserting Audio signals either the possibly existing factory audio-AUX-input or a FM-modulator can be used. If 2 audio sources shall be connected to the infotainment, an additional electronic is necessary to switch them.

Factory rear-view camera — Automatically switching-back from inserted video to factory rear-view camera is only possible while the reverse gear is engaged. To delay the switch-back an additional electronic part is required.

PDC and guidelines — If the video interface does not receive the required information from the vehicle CAN-bus, neither guide-lines nor optical PDC display will be supported.

1.3. Boxes and connectors – video interface

The video-interface converts the video signals of connected after-market sources in a factory monitor compatible picture signal which is inserted in the factory monitor, by using separate trigger options. Further it reads the vehicle's digital signals out of the vehicle's CAN-bus and converts them for the video interface.

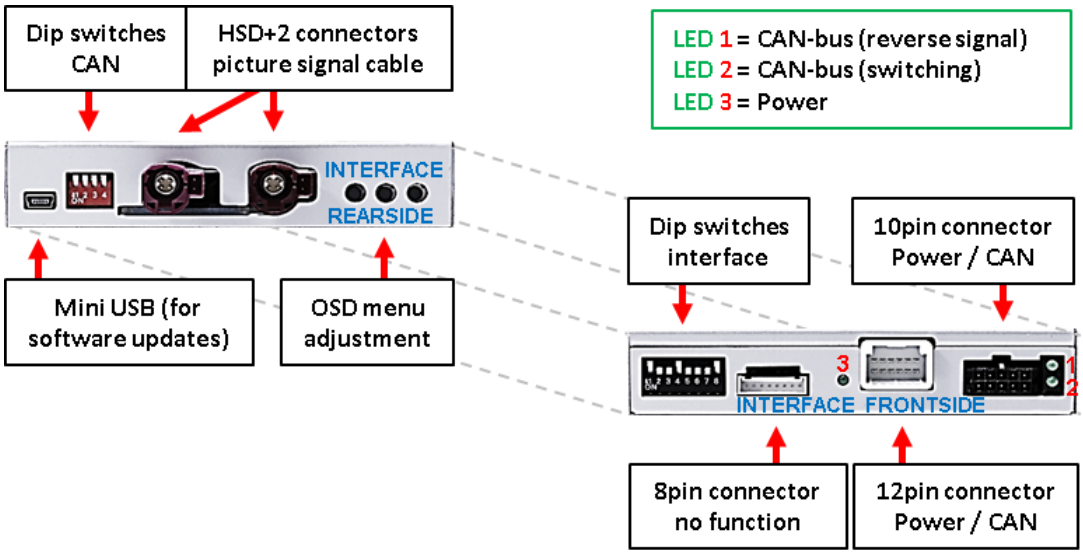

1.4. Settings - 8 Dip switches (black)

Some settings have to be selected by the dip-switches of the video interface.
Dip position down is ON and position up is OFF.

Dip	Function	ON (down)	OFF (up)
1	PDC	enabled	disabled
2	CVBS Video 1-input	enabled	disabled
3	CVBS Video 2-input	enabled	disabled
4	No function		set to OFF
5	Rear-view cam type	after-market	factory or none
6	Guide lines	enabled	disabled
7	Monitor adjustments	Try all possible combinations of Dips 7 and 8 to receive the best picture (quality and size) or see chapter "Monitor selection (dip 7 and 8)"	
8			

See the following chapters for detailed information.

1.4.1. Activating the PDC function (dip 1)

If set to ON the interface will display an image of a car on the right side of the factory monitor. If set to OFF, the PDC car won't be visible on the display.

Note: If there is no communication between interface and the vehicle`s CAN-bus (several vehicles aren't compatible), the PDC function cannot be used.

1.4.2. Enabling the interface's video inputs (dip 2-3)

Only by dip switches enabled video inputs can be accessed by switching through the interface's video sources. It is recommended to enable only the required inputs. Disabled inputs will be skipped while switching through the video interfaces inputs.

Note: Dip 4 is out of function and have to be set to **OFF**!

1.4.3. Rear-view camera setting (dip 5)

If set to OFF, the interface switches to factory picture while the reverse gear is engaged to display factory rear-view camera or factory optical park system picture.
If set to ON, the interface switches to its rear-view camera input while the reverse gear is engaged.

1.4.4. Activating the guidelines (dip 6)

If set to ON, the guidelines will be shown on the display. If set to OFF, the guide lines won't be visible on the display.

Note: If there is no communication between interface and the vehicle`s CAN-bus (several vehicles aren't compatible), the reverse gear guide-lines can`t be shown during the vehicle's operation, even if they once appear after having switched the system to powerless

1.4.5. Monitor selection (dip 7 and 8)

Dip7 and 8 change the monitor-specific video settings.

Size of monitor	Dip 7	Dip8
6,5inch monitor	OFF	ON
7inch monitor	try all possible settings of dip 7+8 to find the best picture (in quality and size)	
8,8inch monitor	ON	OFF
10.25inch monitor	OFF	OFF

Note: For 10.25 inch monitor, the picture signal cable **CAB-HSD2-DF100** has to be used.

1.5. Settings of the 4 Dip switches (CAN functions – red)

Dip position down is ON and position up is OFF.

Fahrzeug/Navigation	Dip 1	Dip 2	Dip 3	Dip 4
BMW/Mini NBT system (with Apix)	OFF	**ON**	OFF	OFF
BMW NBT2 system (with Apix2)	OFF	OFF	OFF	OFF
Mini NBT2 system (with Apix2)	OFF	**ON**	OFF	OFF

Note: In case of absent or defective picture representation or faulty CAN communication, try also dip switch 2 in OFF position!

After each Dip-switch-change a power-reset of the Can-box has to be performed!

2. Installation

To install the interface, first switch off the ignition and disconnect the vehicle's battery. Please read the owner`s manual of the car, regarding the battery`s disconnection! If required, enable the car`s Sleep-mode (hibernation mode)
In case the sleep-mode does not succeed, the disconnection of the battery can be done with a resistor lead.
If the necessary stabilized power supply for the interface is not taken directly from the battery, the chosen connection has to be checked for being constantly stabile.
The interface needs a permanent 12V source!

Before a final installation, we recommend a test-run to ensure the compatibility of the vehicle and the interface. Due to changes in the production of the vehicle manufacturer there's always a possibility of incompatibility.

2.1. Place of installation

The interface is supposed to be installed at a suitable location behind the vehicle`s head-unit.

2.2. Connection schema

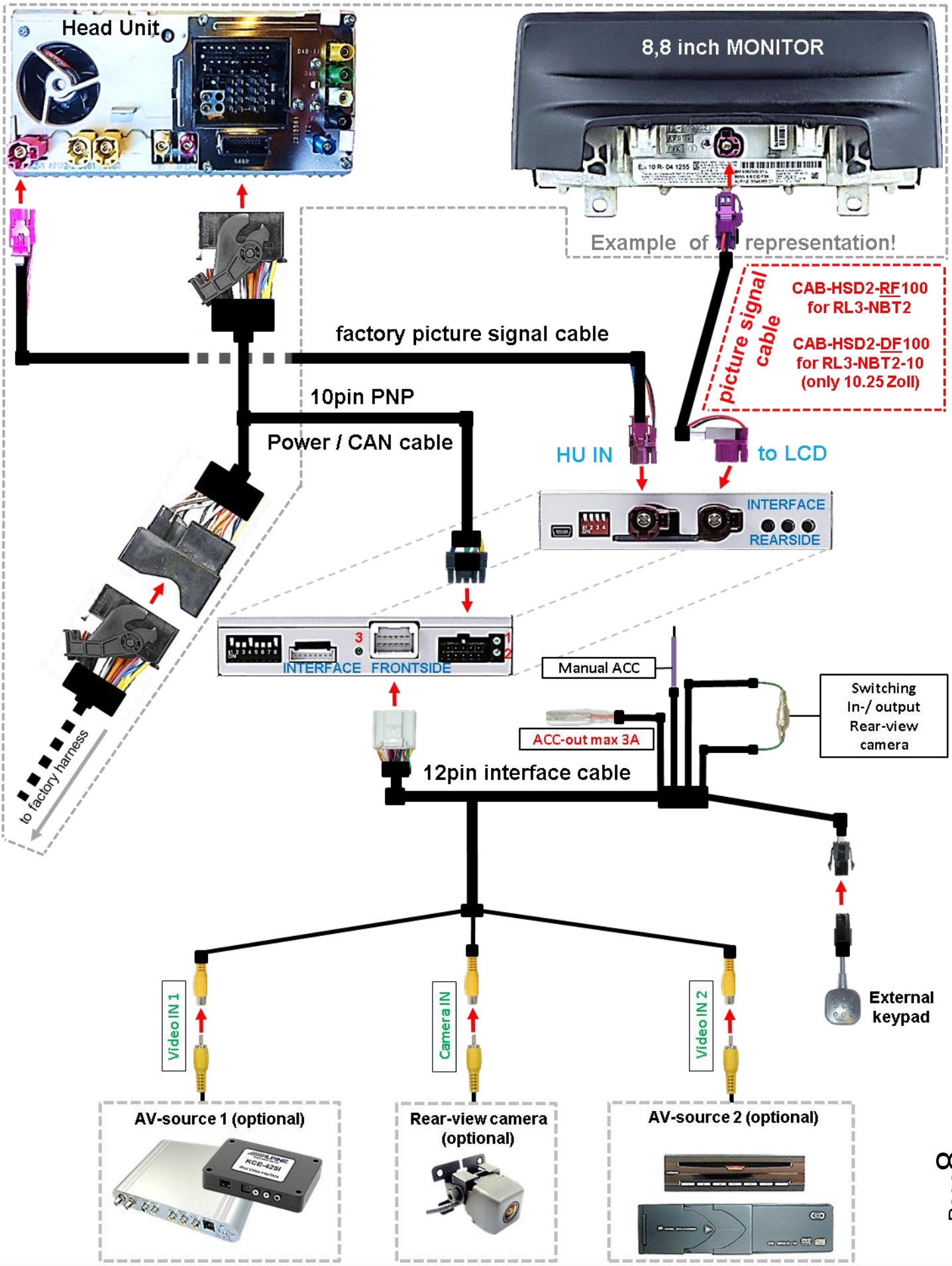

2.3. Connections to factory head-unit and monitor

2.3.1. Connection - picture signal cable

2.3.1.1. RL3-NBT2

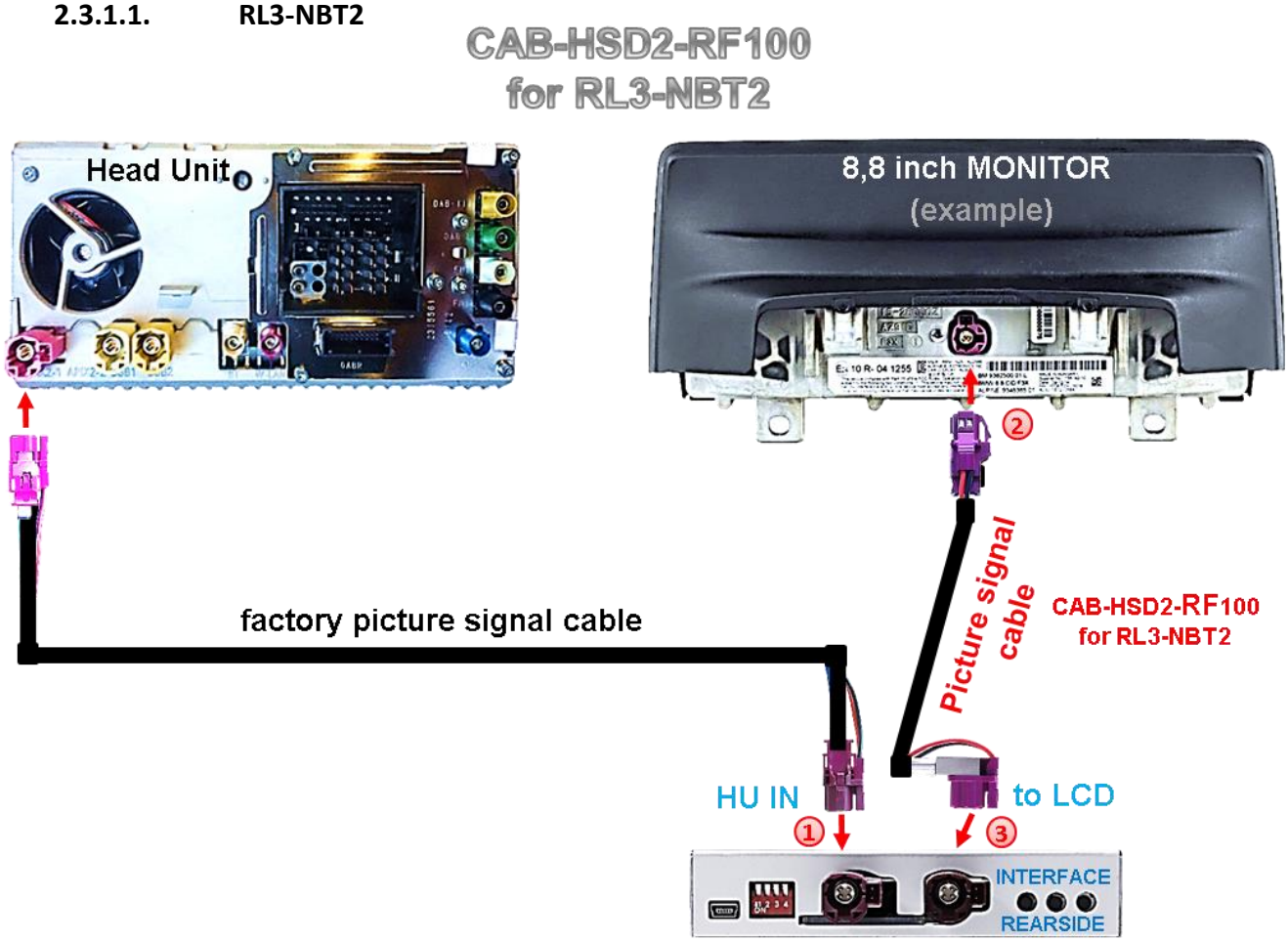

1. Disconnect the factory picture signal cable's bordeaux coloured HSD+2 connector from the rear-side of the monitor and connect it to the bordeaux coloured HSD+2 connector „HU IN" of the video interface .

2. Connect the not-angled bordeaux coloured HSD+2 connector of the enclosed picture signal cable **CAB-HSD2-RF100** to the previously become free bordeaux coloured HSD+2 connector at the monitor's rear side.

3. Connect the opposite angled bordeaux coloured HSD+2 connector of the enclosed picture signal cable **CAB-HSD2-RF100** to the bordeaux coloured male HSD+2 connector „TO LCD" of the video interface.

Attention: The picture signal cable's connecting direction doesn't have an impact on the system's function, for that the angled and not-angled HSD+2 connectors are allowed to be interchanged, depending on the HSD+2 connectors mounting space at the monitor.

However, mixing up/interchanging the connections of „HU IN" and „TO LCD" will cause dysfunktion or even damage to the system!

Note: The colours of the HSD+2 connectors at monitor and head unit may vary.

2.3.1.2. RL3-NBT2-10

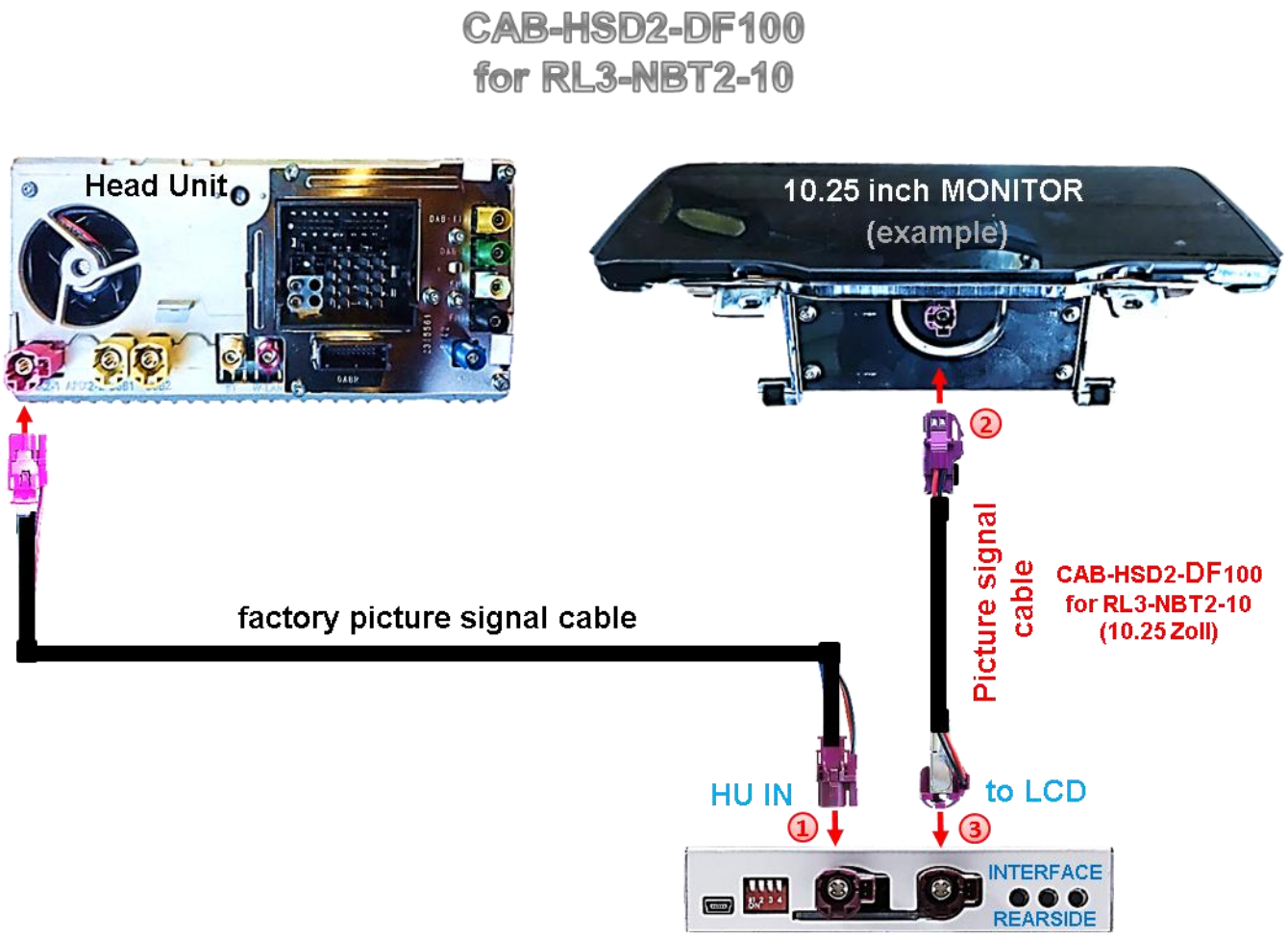

1. Disconnect the factory picture signal cable's bordeaux coloured HSD+2 connector from the rear-side of the monitor and connect it to the bordeaux coloured HSD+2 connector „HU IN" of the video interface .

2. Connect the not-angled bordeaux coloured HSD+2 connector of the enclosed picture signal cable **CAB-HSD2-DF100** to the previously become free bordeaux coloured HSD+2 connector at the monitor's rear side.

3. Connect the opposite angled bordeaux coloured HSD+2 connector of the enclosed picture signal cable **CAB-HSD2-DF100** to the bordeaux coloured male HSD+2 connector „TO LCD" of the video interface.

Attention: The picture signal cable's connecting direction doesn't have an impact on the system's function, so that the angled and not-angled HSD+2 connectors are allowed to be interchanged, depending on the HSD+2 connectors mounting space.

However, mixing up/interchanging the connections of „HU IN" and „TO LCD" will cause dysfunktion or even damage to the system!

Note: The colours of the HSD+2 connectors at monitor and head unit may vary.

2.3.2. Connection – Quadlock/CAN

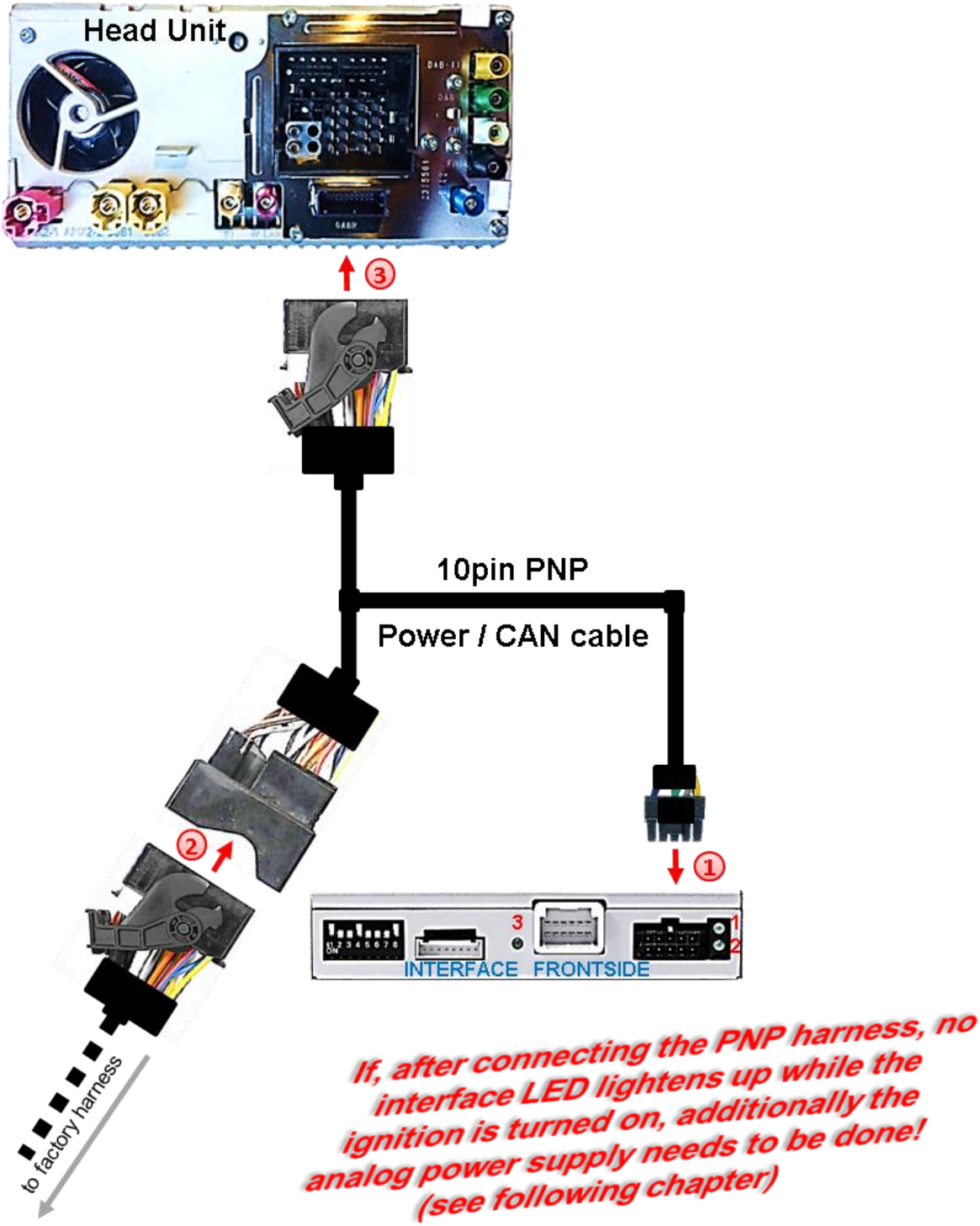

1. Connect the female 10pin connector of the 10pin PNP Power / CAN cable to the 10pin connector of the video interface.

2. Remove the female 40pin Quadlock connector of the vehicle harness from the rear-side of the head-unit and connect it to the male 40pin Quadlock connector of the 10pin PNP Power / CAN cable.

3. Connect the opposite female Quadlock connector of the 10pin PNP Power / CAN cable to the previously become free male Quadlock connector at the rear-side of the head unit.

2.4. Analog power supply for the video interface

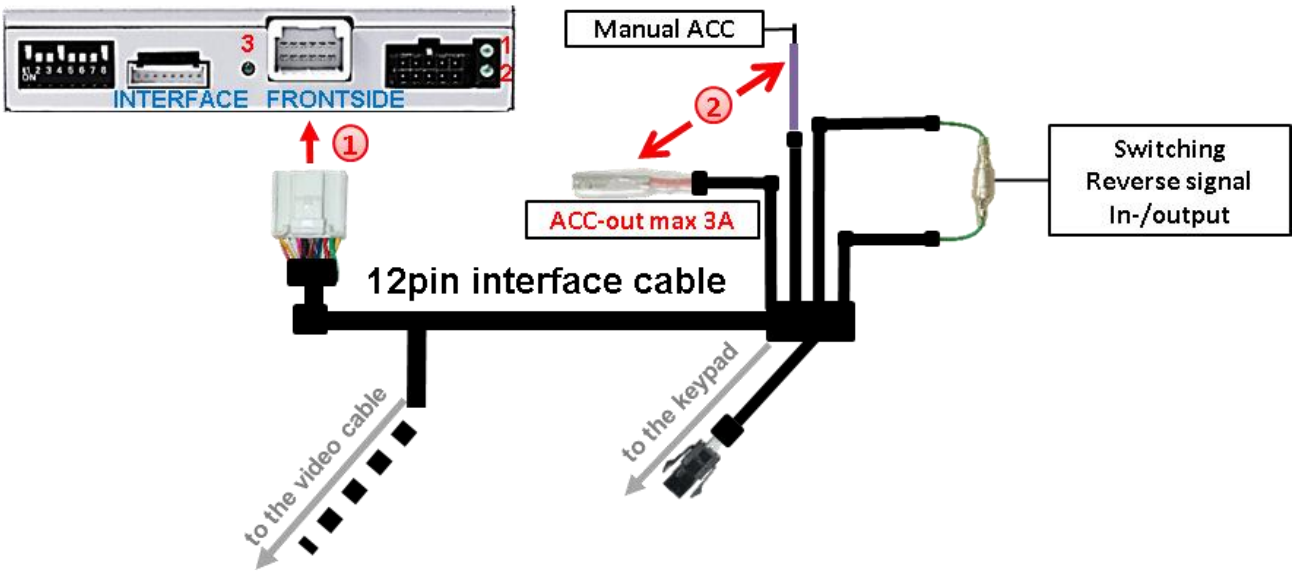

1. Connect the female 12pin connector of the 12pin interface cable to the male 12pin connector of the video interface.

2. Connect the red coloured wire **ACC-out (max 3A)** and the purple coloured wire **Manual ACC** of the 12pin interface cable both to **S-contact terminal 86s +12V** (e.g. glove compartment illumination).

2.5. Connection - video sources

It is possible to connect an after-market rear-view camera and two more Video sources to the video-interface.

Before a final installation of the video sources, we recommend a test-run to ensure the compatibility of vehicle and interface. Due to changes in the production of the vehicle manufacturer there's always a possibility of incompatibility.

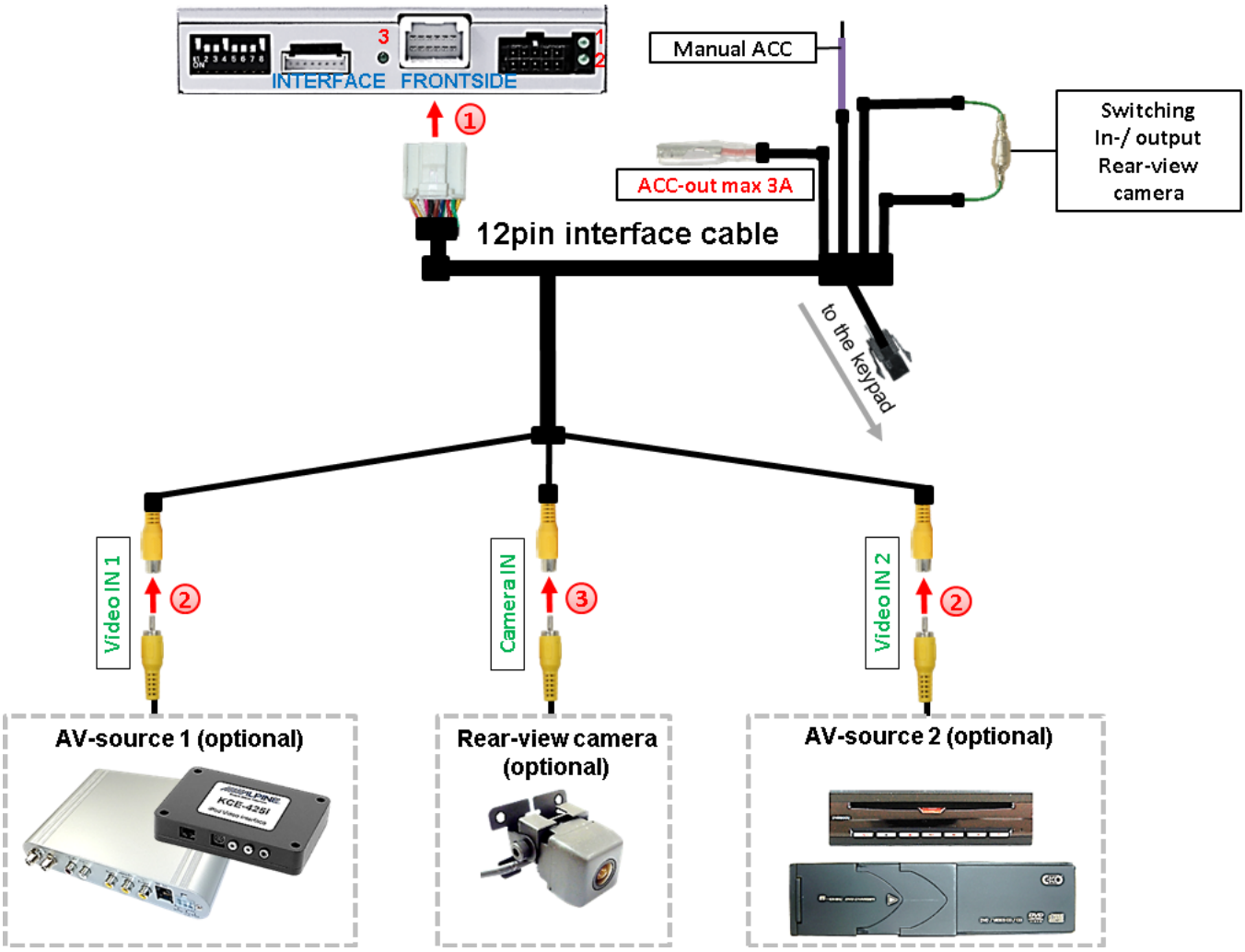

1. Connect the 12pin interface cable's female 12pin connector to the male 12pin connector of the video-interface.

2. Connect the video RCA of the video source 1 and 2 to the female RCA connector **"Video IN1"** and **"Video IN 2"** of the 12pin interface cable.

3. Connect the video RCA of the rear-view camera to the 12pin interface cable's female RCA connector **"Camera IN"**.

2.5.1. Audio-insertion

This interface is only able to insert video signals into the factory infotainment. If an AV-source is connected, the audio insertion has to be done by the factory audio AUX input or an FM-modulator. The inserted video-signal can be activated simultaneously to each audio-mode of the factory infotainment. If 2 AV sources shall be connected to the infotainment, additional electronic is necessary to switch the audio signals.

2.5.2. After-market rear-view camera

Some vehicles have a different reverse gear code on the CAN-bus which the video-interface is not compatible with. Therefore, there are two different ways of installation. If the video interface receives a signal of the reverse gear, the green wire **"Reverse-OUT"** of the 20pin cable should carry +12V while the reverse gear is engaged.

Note: Do not forget to set video interface's dip5 to ON before testing.

2.5.2.1. Case 1: Interface receives the reverse gear signal

If the interface delivers +12V on the green output wire of the 12pin interface cable while reverse gear is engaged, the video interface will automatically switch to the rear-view camera input **"Camera IN"** while the reverse gear is engaged.

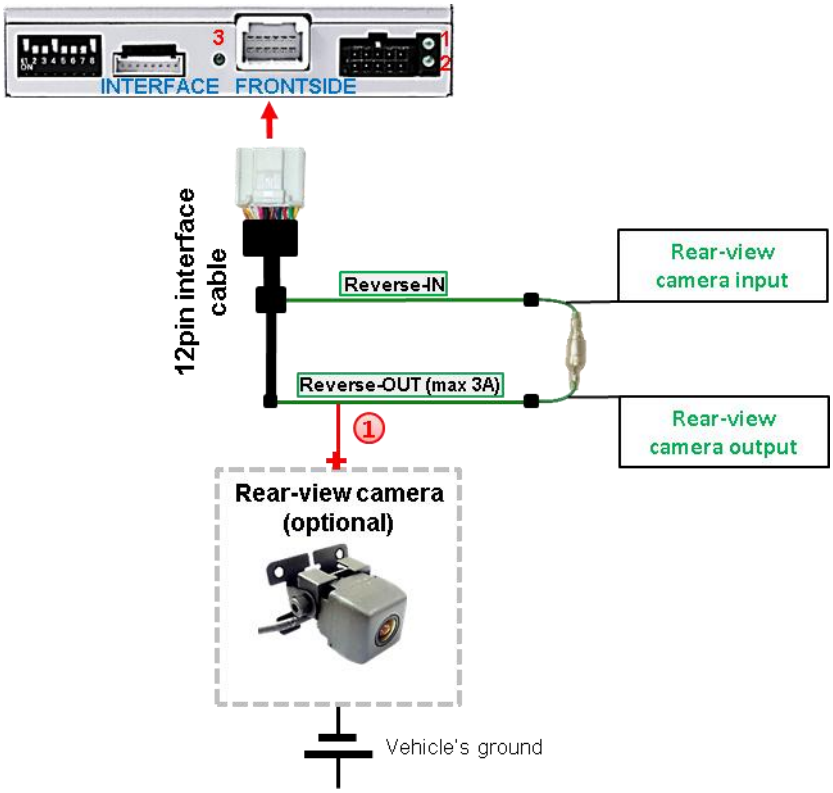

1 Additionally, the +12V (max. 3A) power supply for the rear-view camera can be taken from the green wire of the 12pin interface cable.

2.5.2.2. Case 2: Interface does not receive the reverse gear signal

If the video interface does not deliver +12V on the green wire of the 12pin cable when reverse gear is engaged (not all vehicles are compatible), an external switching signal from the reverse gear light is required. As the reverse gear light's power supply isn't voltage-stabile all the time, an ordinary open relay (e.g AC-RW-1230 with wiring AC-RS5) or filter (e.g. AC-PNF-RVC) is required. The diagram below shows the connection type of the relay.

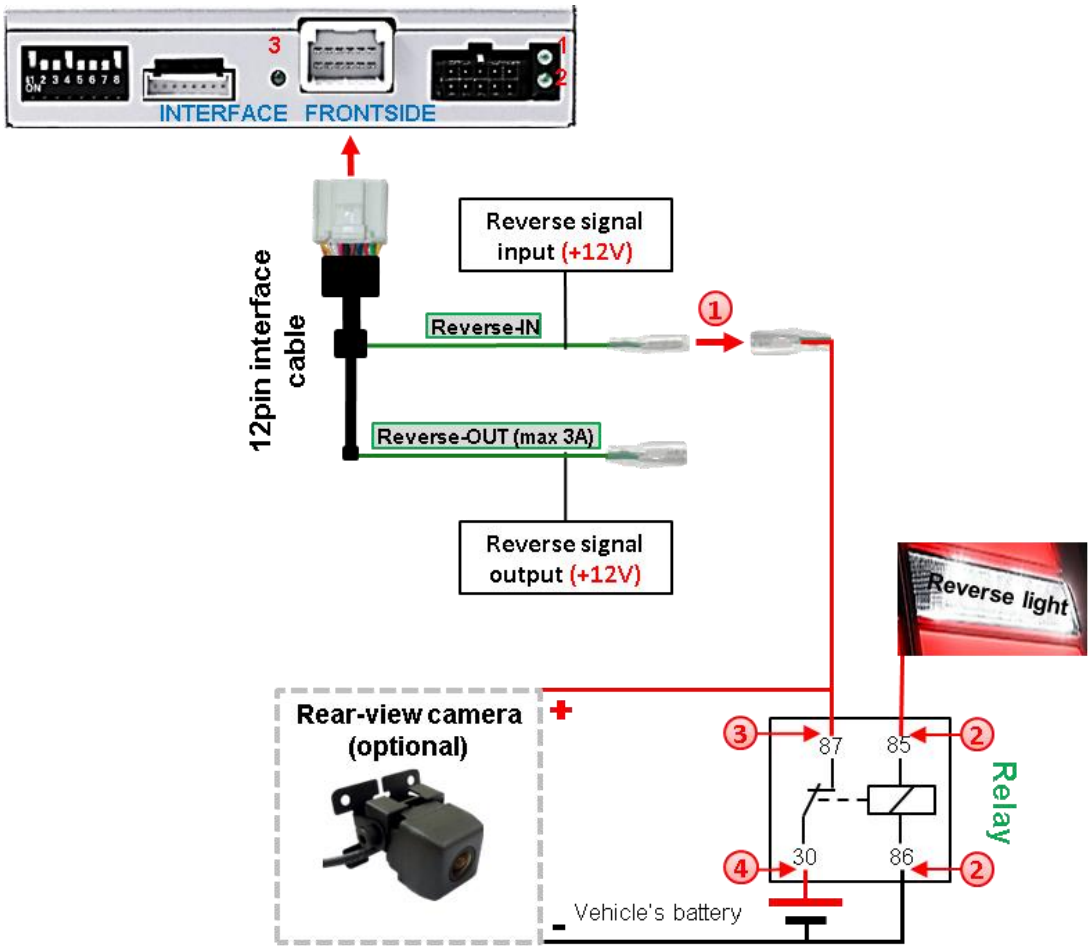

1. Disconnect the green cable's preconnected male- and female connectors of the 12pin interface cable and connect the green input cable **"Reverse-IN"** to the output connector (87) of the relay.

   Note: Last but not lot least to avoid short circuits, the best solution should be, to crimp a male 4mm connector to the relay's output cable and connect it to the green cable's female 4mm connector. The output-cable **"Reverse-OUT"** remains disconnected as it's out of function.

2. Connect the Reverse light's power-cable to coil (85) and the vehicle's ground to coil (86) of the relay.

3. Connect the output connector (87) of the relay to the rear-view camera's power-cable, like you did it to the green **"Reverse-IN"** cable before.

4. Connect stabile and permanent +12V to the relay's input connector (30).

2.6. Connection - video-interface and keypad

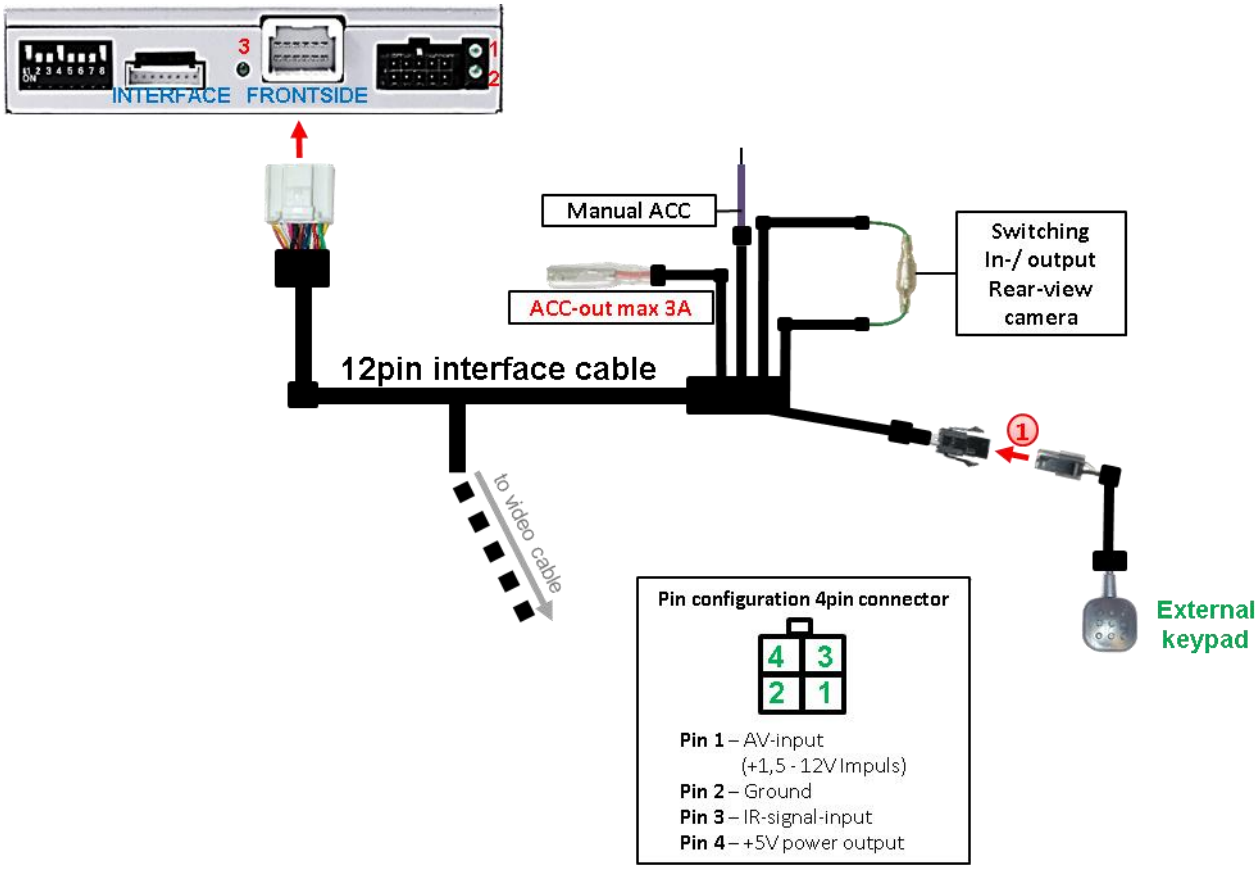

1 Connect the female 4pin connector of the keypad to the male 4pin connector of the 12pin interface cable.

Note: Even if switching through several video sources by the keypad mightn't be required, the invisible connection and availability is strongly recommended.

2.7. Picture settings and guide lines

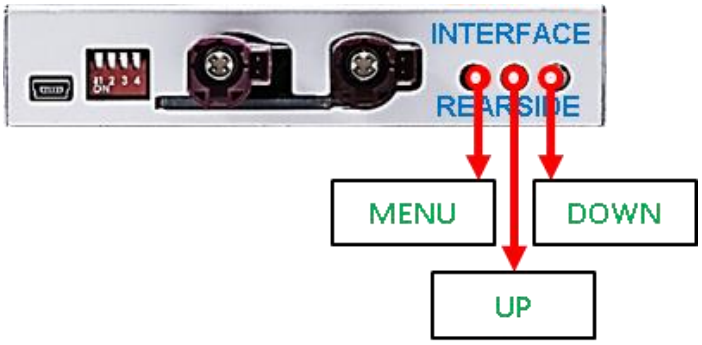

The picture settings are adjustable by the 3 push-buttons at the rear-side of the video-interface. Press the MENU button to open the OSD settings menu or to switch to the next menu item. Press UP and DOWN to change the selected value. The buttons are placed inside in the housing to avoid accidental changes during or after the installation. Picture settings must be done separately for AV1 and AV2 while the corresponding input is selected and visible on the monitor.

Note: The OSD menu is only shown when a working video source is connected to the selected video-input of the interface.

The following settings are available:

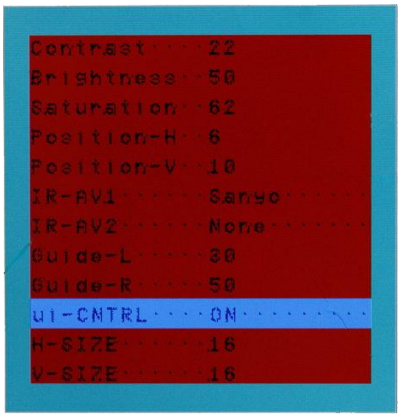

Contrast
Brightness
Saturation
Position H (horizontal)
Position V (vertical)
IR-AV1/2 (no function)
Guide L/R (no function)
UI-CNTRL (ON/OFF) guide lines
Size H/V (picture size horizontal/vertical)

Note:
To adjust the reverse picture, engage the reverse gear.
To adjust the guide lines, move the steering wheel to see the changes.
If there is no communication between interface and the vehicle`s CAN-bus (several vehicles aren't compatible), the reverse gear guide-lines can`t be shown during the vehicle's operation, even if they once appear after having switched the system to powerless!

3. Interface operation

3.1. By factory infotainment button

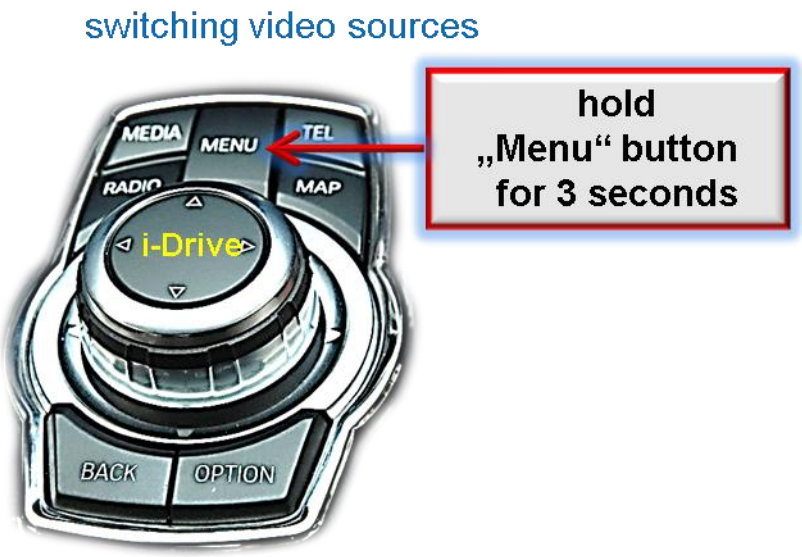

To switch the interface’s activated video sources; the factory infotainment buttons can be used.

Press the according infotainment button to switch the input from the factory video to the inserted video sources. If all inputs are activated by dip switch settings, the order is the following:

Factory video → Video IN 1 → Video IN 2 → factory video

Each press will switch to the next enabled input. Inputs which are not enabled will be skipped.

Switchover by vehicle buttons isn’t possible in all vehicles. In some vehicles the external keypad has to be used.

3.2. By keypad

Alternatively or additionally to the factory infotainment buttons, the interface’s external keypad can be used to switch the enabled inputs. Even if not needed, the keypad should always remain connected to the video interface for support purposes.

4. Specifications

BATT/ACC range	7V - 25V
Stand-by power drain	10mA
Power	320mA @12V
Video input	0.7V - 1V
Video input formats	NTSC and PAL
Temperature range	-40°C to +85°C
Dimensions video-box	112 x 22 x 115 mm (W x H x D)

5. FAQ – Trouble shooting Interface functions

For any troubles which may occur, check the following table for a solution before requesting support from your vendor.

Symptom	Reason	Possible solution
No picture/black picture (factory picture).	Not all connectors have been reconnected to factory head-unit or monitor after installation.	Connect missing connectors.
	No power on CAN-bus box (all LED CAN-bus box are off).	Check power supply of CAN-bus box. Check CAN-bus connection of CAN-bus box.
	CAN-bus box connected to CAN-bus in wrong place.	Refer to the manual where to connected to the CAN-bus. If not mentioned, try another place to connect to the CAN-bus.
	No power on video-interface (all LED video-interface are off).	Check whether CAN-bus box delivers +12V ACC on red wire output of 8pin to 6pin cable. If not cut wire and supply ACC +12V directly to video-interface.
No picture/black picture/white picture (inserted picture) but factory picture is OK.	No picture from video source.	Check on other monitor whether video source is OK.
	No video-source connected to the selected interface input.	Check settings dips 1 to 3 of video interface which inputs are activated and switch to corresponding input(s).
	LVDS cables plugged in wrong place.	Double-check whether order of LVDS cables is exactly connected according to manual. Plugging into head-unit does not work when the manual says to plug into monitor and vice versa.
Inserted picture totally wrong size or position.	Wrong monitor settings of video-interface.	Try different combinations of dips 7 and 8 of video-interface. Unplug 6pin power after each change.
Inserted picture double or 4 times on monitor.		
Inserted picture distorted, flickering or running vertically.	Video sources output set to AUTO or MULTI which causes a conflict with the interfaces auto detection.	Set video source output fixed to PAL or NTSC. It is best to set all video sources to the same standard.
	If error occurs only after source switching: Connected sources are not set to the same TV standard.	Set all video sources to the same standard.
Inserted picture b/w.	Some interfaces can only handle NTSC input.	Check manual whether there is a limitation to NTSC mentioned. If yes, set source fixed to NTSC output.
Inserted picture qual. bad.	Picture settings have not been adjusted.	Use the 3 buttons and the interface's OSD to adjust the picture settings for the corresponding video input.
Inserted picture size slightly wrong.		
Inserted picture position wrong.		
Camera input picture flickers.	Camera is being tested under fluorescent light which shines directly into the camera.	Test camera under natural light outside the garage.
Camera input picture is bluish.	Protection sticker not removed from camera lens.	Remove protection sticker from lens.

Symptom	Reason	Possible solution
Camera input picture black.	Camera power taken directly from reverse gear lamp.	Use relay or electronics to "clean" reverse gear lamp power. Alternatively, if CAN-bus box is compatible with the vehicle, camera power can be taken from green wire of 6pin to 8pin cable.
Camera input picture has distortion.		
Camera input picture settings cannot be adjusted.	Camera input picture settings can only be adjusted in AV2 mode.	Set dip 3 of video-interface to ON (if not input AV2 is not already activated) and connect the camera to AV2. Switch to AV2 and adjust settings. Reconnect camera to camera input and deactivate AV2 if not used for other source.
Graphics of a car in camera input picture.	Function PDC is ON in the interface OSD.	In compatible vehicles, the graphics will display the factory PDC distance. If not working or not wanted, set interface OSD menu item UI-CNTRL to ALLOFF.
Chinese signs in camera input picture	Function RET or ALL is ON (function for Asian market) in the interface OSD.	Set interface OSD menu item UI-CNTRL to ALLOFF or PDCON.
Not possible to switch video sources by OEM button.	CAN-bus interface does not support this function for vehicle.	Use external keypad or cut white wire of 6pin to 8pin cable and apply +12V impulses for AV-switching.
	Pressed too short.	For video source switching a longer press of about 2.5 seconds is required.
Not possible to switch video sources by external keypad.	SW-version of interface does not support external keypad.	Use OEM-button or cut white wire of 6pin to 8pin cable and apply +12V impulses for AV-switching.
Interface does not switch to camera input when reverse gear is engaged.	CAN-bus interface does not support this function for the vehicles.	Cut the green wire of the 6pin to 8pin cable and apply +12V constant from reverse gear-lamp signal. Use relay to "clean" R-gear lamp power.
Interface switches video-sources by itself.	CAN-bus interface compatibility to vehicle is limited.	Cut the grey wire of 6pin to 8pin and isolate both ends. If problem still occurs, additionally cut the white wire of 6pin to 8pin cable and isolate both ends.

E11 10R-03 5384

Made in China

RoHS