Video inserter

CI-HDA-MIB3-EIGP

Compatible with
Seat, Skoda and VW vehicles with MIB3 Entry GP all-in-one head-unit by Joynext and 8.25 or 8inch monitor



Examples

Attention!
The video signal type for each video source must be defined in the OSD menu of the corresponding video input.

Product features

- **1 x CVBS/AHD input for rear-view camera**
- **1 x CVBS/AHD input for front camera**
- **2 x CVBS/AHD input for side cameras or additional after-market video-sources (e.g. USB devices, DVB-T2 tuner, etc.)**
- **All inputs are compatible with NTSC and PAL**
  Supported AHD resolutions 720p NTSC (30Hz)**, 720p PAL** (25Hz)**, 960p NTSC** (30Hz)**, 960p PAL** (25Hz)**, 1080p NTSC** (30Hz)**, 1080p PAL** (25Hz)
- **Automatic switchover to rear-view camera input while reverse gear is engaged**
- **Automatic front camera switchover while reverse gear is engaged for 5, 10, 15 or 20 second intervals**
- **Adjustable guide lines (fixed or dynamic) for rear-view camera can be activated (dynamic guide lines not available for all vehicles)**
- **Split-screen display of two video inputs at a time: both side cameras/additional after-market video-sources, or front and rear-view camera**
- **Picture free while driving (ONLY for fed-in video sources)**

Table of contents

1 Before installation 3
1.1 Scope of delivery 3
1.2 Checking interface compatibility with vehicle and accessories 4
1.3 Boxes and connections 5
1.3.1 Connections – video interface 5
1.3.2 Connections – daughter PCB 6
1.4 Settings – 8 dip switch bench (interface functions) 6
1.4.1 Interface video inputs "V1-Left" and "V2 Right" (Dip 1-2) 7
1.4.2 Front camera input "V3 front" (Dip 3) 7
1.4.3 Rear-view camera settings (Dip 4) 7
1.4.4 Rear-view camera connection type (Dip 5) 7
1.4.5 Split-screen display “V1-Left" and “V2-Right" (Dip 7) 7
1.4.6 Split-screen display “V3-Front" and “V4-Reverse" (Dip 8) 7
1.5 Settings - 4 dip switch bench (CAN bus) 8

2 Installation 8
2.1 Place of connection 8
2.2 Connection schema 9
2.3 Installation – daughter PCB 10
2.3.1 Number of ribbon cables required per Head Unit 10
2.3.2 Installation – Daughter PCB – All-in-One Head Unit in Seat vehicles 11
2.3.3 Installation – Daughter PCB – All-in-One Head Unit in Seat and Skoda vehicles 14
2.3.4 Installation – Daughter PCB – All-in-One Head Unit in VW vehicles 16
2.4 Connection – picture signal cable 20
2.5 Connection – cable sets, power supply and CAN bus or analogue without CAN bus 21
2.5.1 Connection with CAN bus 22
2.5.2 Analogue connection without CAN bus 23
2.6 Power supply outputs 24
2.6.1 Connection and power supply - Video sources Rear-view camera, front camera and 2 side cameras 25
2.6.2 Connection and power supply - Video sources rear-view camera, front camera and 2 video sources 26
2.7 Aftermarket rear-view camera 27
2.7.1 Case 1: Reverse gear signal from CAN bus 27
2.7.2 Case 2: Reverse gear signal from analogue signal 28
2.8 Aftermarket front camera 29
2.9 Aftermarket side cameras 30
2.9.1 Case 1: Flashing turn signals from CAN bus 30
2.9.2 Case 2: turn signals from analogue signal 31
2.10 Audio insertion 32
2.11 Connection – video interface and external keypad 33
2.12 Settings OSD menu 34

3 Operation of the video interface 37
3.1 Optional: Operating the video interface via the "HDA-RC" remote control 37

4 Specifications 38

5 FAQ – Troubleshooting interface functions – product-specific 38

6 FAQ - Troubleshooting Interface functions - general 39

Legal notice

The driver must not be distracted, either directly or indirectly, by moving pictures while driving. In most countries/states, this is prohibited by law. We therefore exclude any liability for property damage or personal injury caused directly or indirectly by the installation and operation of this product. In addition to operation when stationary, this product is only intended for displaying static menus (e.g. MP3 menu from USB devices) or pictures from (rear-view) cameras while driving.

Changes/updates to the vehicle software may impair the functionality of the interface. Software updates for our interfaces are provided to customers free of charge for up to one year after purchase of the interface. The interface must be sent in free of charge for the update. Costs for installation and removal will not be reimbursed.

1 Before installation

These instructions must be read before installation. Specialist knowledge is required for installation. The interface must not be installed near sources of moisture or heat.

Before final installation in the vehicle, we recommend a test run after connection to ensure that the vehicle and interface are compatible. Due to production-related changes by the vehicle manufacturer, there is always the possibility of incompatibility.

1.1 Scope of delivery



Note the serial number of the interface and keep the instructions for support purposes:

_____

1.2 Checking interface compatibility with vehicle and accessories

Requirements

Manufacturer	Compatible vehicles	Compatible systems
Seat	Arona (KJ7) from about 04/2024, Ateca (KH7) from about 04/2024, Ibiza5 (KJ) from about 03/2024	MIB3 Entry GP – Media System – All-in-one head unit by Joynext with 8.25inch monitor (Play button third from the left, Phone button fourth from the left)
Skoda	Fabia4 (PJ) from about 02/2024, Kamiq (NW4) from about 04/2024, Scala (NW1) from about 02/2024	MIB3 Entry GP – Swing – All-in-one head unit by Joynext with 8.25inch monitor (3 buttons on the left and 3 on the right, each with additional icons)
VW	Polo (AW1) from 03/2024, T-Cross (C1) from 12/2023, T-Roc (A11) from 03/2024. Taigo (CS) from 03/2024	MIB3 Entry GP - Composition - All-in-one head-unit by Joynext with 8inch monitor (four buttons on the left with a knob in between)

Limitations

CAN bus compatibility	The CAN bus compatibility of the interface may be restricted for some vehicles, either completely or for individual functions. This may become apparent during installation or at a later date. The interface with all video inputs can be operated with analogue switching signals without connection to the vehicle CAN bus. This eliminates the need for individual additional functions, see chapter*2.5.2 Analogue connection without CAN bus* .
Video only	Interface does **not insert** any **audio** signals. To insert audio signals, any existing factory audio AUX input or optional products must be used (e.g. FM modulator).
Factory rear-view camera	Automatic switching to rear-view camera input only occurs while reverse gear is engaged. Optional accessories are required for different switching times.
Aftermarket front camera	Switching to the front camera occurs automatically after reverse gear has been engaged for 5, 10, 15 or 20 seconds (depending on the OSD menu setting). Manual switching to the front camera is also possible via the external keypad.
Guide lines for rear-view camera	If the vehicle CAN bus is not fully compatible with the interface or if an analogue connection is used, the dynamic guide lines function cannot be used.

1.3 Boxes and connections

1.3.1 Connections – video interface

The video interface converts video signals from after-market sources into a video signal compatible with the factory head unit. This is inserted into the factory monitor via various switching options. It also reads digital signals from the vehicle CAN bus and converts them for its own functions.

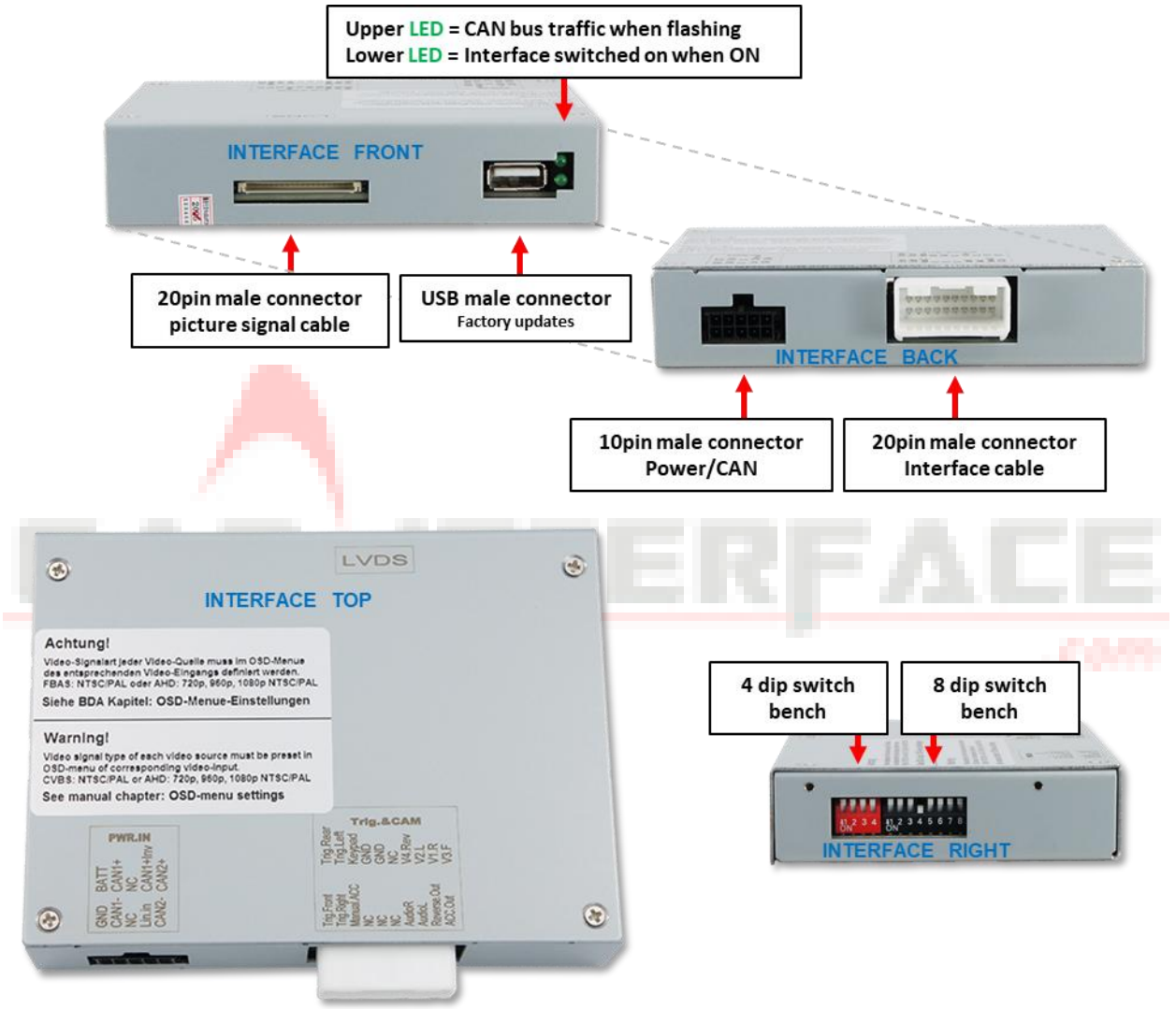

1.3.2 Connections – daughter PCB

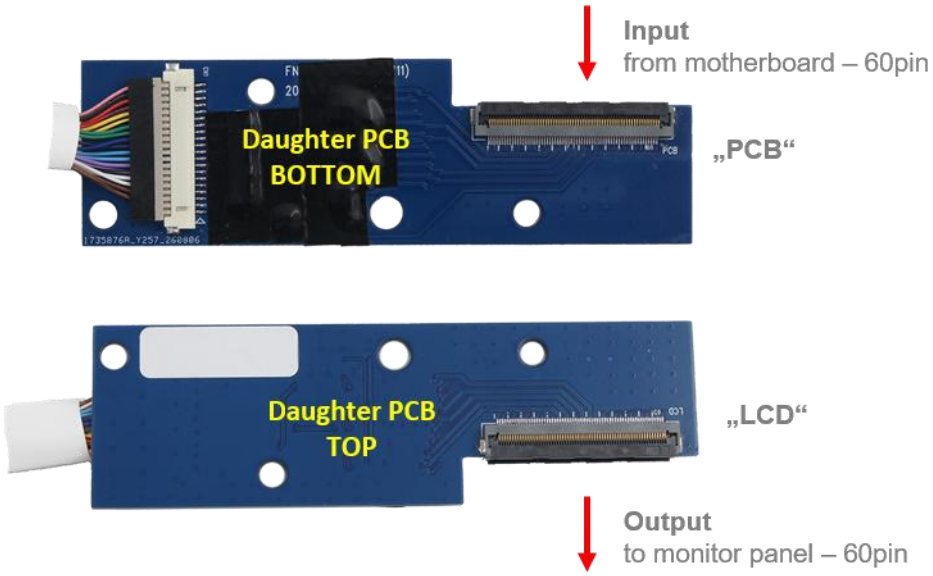

1.4 Settings – 8 dip switch bench (interface functions)



Interface box, right side, black

Dip position **UP = OFF (up)** and **DOWN = ON (down)**

Dip	Function	ON (down)	OFF (up)
1	Video 1 / V1-Left	activated	deactivated
2	Video 2 / V2-Right	activated	deactivated
3	Front camera / V3 front	activated*	deactivated
4	Type of rear-view camera (V4 Reverse)	Aftermarket	Factory or none
5	Connection type of the aftermarket rear-view camera	-	V4 Reverse (CVBS/AHD)
6	No function	-	Set to OFF
7	Split-screen display	V1-Left + V2-Right	-
8	Split-screen display	V3-Front + V4-Reverse	-

Power reset interface after each dip change to activate changes!

* Switching to the front camera occurs automatically for 5, 10, 15 or 20 seconds (depending on the OSD menu setting) after reverse gear is engaged.

See following chapters for detailed information about 8dip switch bench.

1.4.1 Interface video inputs "V1-Left" and "V2 Right" (Dip 1-2)

With Dip 1 (Dip 2) = **ON**, the CVBS/AHD/CVBS input **V1-Left** (**V2 Right**) is activated for the side camera or other video sources. Only activated video inputs can be accessed – both with automatic and manual switching. It is recommended to activate only inputs that are in use, to avoid accidental switching.

1.4.2 Front camera input "V3 front" (Dip 3)

When Dip 3 = **ON**, the interface switches to the CVBS/AHD/CVBS front camera input **V3-Front** after reverse gear is engaged. In addition, manual switching to the front camera input is possible from any picture mode via an external keypad (short press).
In the OSD menu settings, the automatic display time of the front camera can be selected between 5, 10, 15 or 20 seconds or switched off. Then another video source could also be connected to instead of a front camera.

1.4.3 Rear-view camera settings (Dip 4)

When Dip 4 = **OFF**, the interface switches to the factory image for the existing factory rear-view camera or factory PDC display as long as reverse gear is engaged.
With Dip 4 = **ON**, the interface switches to its CVBS/AHD rear-view camera input **V4-Reverse** while reverse gear is engaged (provided Dip 5 is set to OFF).

1.4.4 Rear-view camera connection type (Dip 5)

With Dip 5 = **OFF,** the **V4 -Reverse** input is selected as the rear-view camera input.

Note: Dip switch 6 has no function and must be set to **OFF.**

1.4.5 Split-screen display "V1-Left" and "V2-Right" (Dip 7)

When Dip 7 is set to ON, the video inputs V1-Left and V2-Right are displayed simultaneously in a split-screen view. This function is activated exclusively via the external keypad or the optionally available "HDA-RC" remote control.

1.4.6 Split-screen display "V3-Front" and "V4-Reverse" (Dip 8)

When Dip 8 is set to ON, the video inputs V3-Front and V4-Reverse are displayed simultaneously in a split-screen view. This function is activated exclusively via the external keypad or the optionally available "HDA-RC" remote control.

Power reset interface after each dip change to activate changes!

1.5 Settings - 4 dip switch bench (CAN bus)

Interface box, right side, red

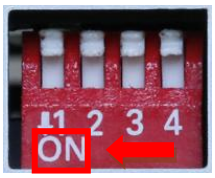

Set the DIP switch positions according to the following table.
Dip position UP = OFF (up) and DOWN = ON (down)

Dip	Function	ON (down)	OFF (up)
1	No function	-	Set to OFF
2	No function	-	Set to OFF
3	No function	-	Set to OFF
4	No function	-	Set to OFF

Power reset interface after each dip change to activate changes!

2 Installation

Switch off the ignition and disconnect the vehicle battery in accordance with the manufacturer's instructions!
If the vehicle battery must not be disconnected according to the manufacturer's specifications, it is usually sufficient to put the vehicle into sleep mode. If this does not work, disconnect the vehicle battery with a resistor cable.

Before final installation, we recommend a test run of the interface with all connected devices to ensure that all parts are compatible. Due to possible changes in the vehicle manufacturer's production at any time, incompatibility can never be ruled out.

As with any installation of retrofit devices, a quiescent current test of all retrofitted devices must be carried out after installation to ensure that the devices switch to standby mode when the vehicle is in sleep mode.

2.1 Place of connection

The daughter PCB is installed inside the all-in-one head unit. The video interface is connected to the daughter PCB and to the rear of the head unit.

2.2 Connection schema

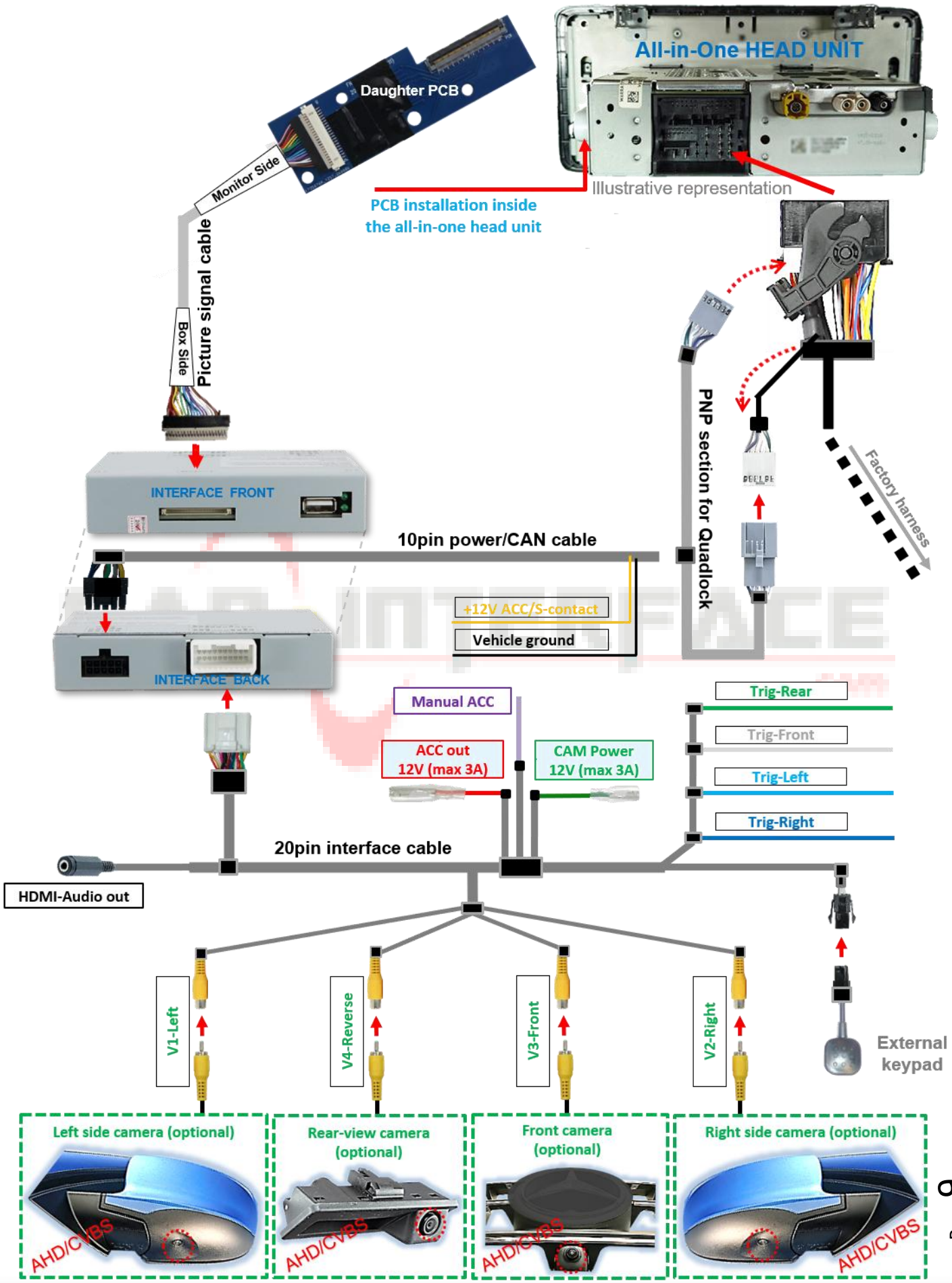

2.3 Installation – daughter PCB

1) The contact ends of ribbon cables must always be clipped in precisely on both sides at right angles, as even the slightest angle changes can lead to poor contact and short circuits.

2) The contact sides of ribbon cables must always correspond to the contact side of the connectors in terms of their installation position.

2.3.1 Number of ribbon cables required per Head Unit



CAR-INTERFACE

2.3.2 Installation – Daughter PCB – All-in-One Head Unit in Seat vehicles



Front of the all-in-one head unit (Seat)



Rear of the all-in-one head unit (Seat)



1 Remove the all-in-one head unit and loosen the four screws on the back (two at the top and two at the bottom).



2 Loosen the two screws on either side andcarefully remove the head unit from the monitor.



3 Loosen the 7 screws on the back of the monitor and remove the metal cover.

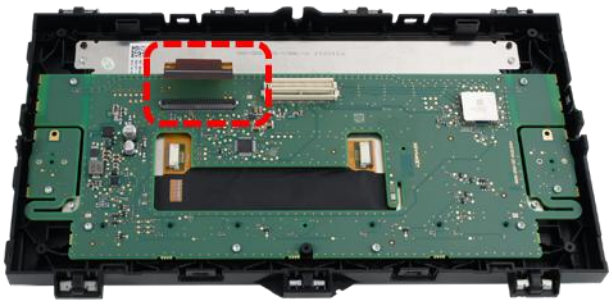

4 Unclip the64-pin OEM ribbon cable from the motherboard that comes from the monitor panel.



5 Snap the monitor panel's spare 64-pin OEM ribbon cable into the 64-pin ribbon cable socket of the flex connector.



6 Snap the **short** 64-pin ribbon cables into the vacant 64-pin ribbon cable sockets on the other side of the flex connector.



7 Snap the 64-pin OEM ribbon cable from the monitor panel – extended by the flex connector and the **short** 64-pin ribbon cable – into the 64-pin ribbon cable socket **LCD** on the bottom of the daughter PCB.

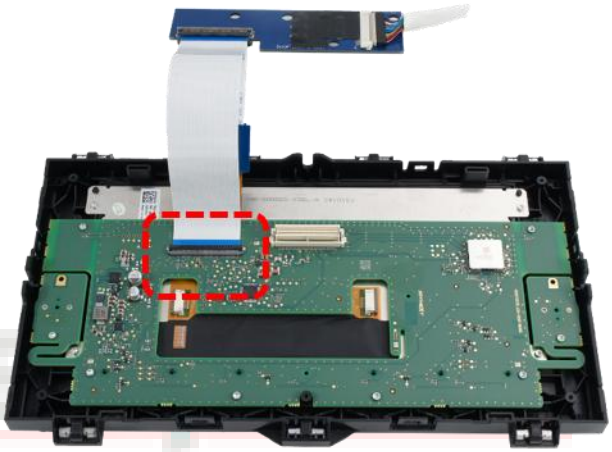

8 Snap the **long** 64-pin ribbon cable into the vacant 64-pin ribbon cable socket on the motherboard.

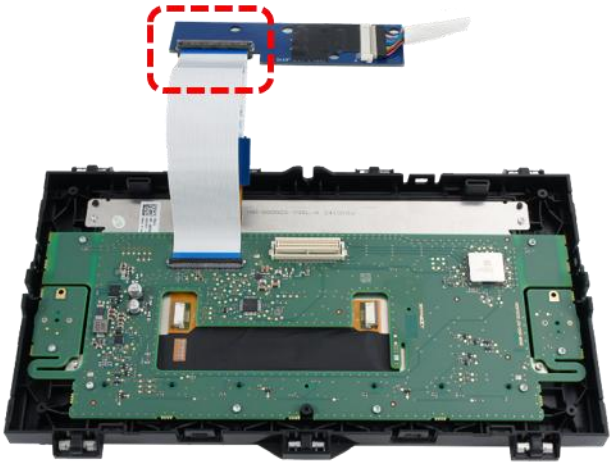

9 Snap the **long**, 64-pin ribbon cable **coming from the motherboard** into the 64-pin ribbon cable socket **PCB** on the top side of the daughter PCB.



10 Wrap insulating tape around the daughter PCB and the flex connector and secure them to the mainboard exactly as shown in the illustration. **Please note: Any deviation from the position shown will prevent the case cover from closing properly.***

***Note:** If the daughter PCB or flex connector is positioned incorrectly, this may result in a black display, non-functioning keypad and missing interface LEDs, as the head unit will not lock into place fully. Check the position as shown above. If necessary, the metal cover in the area of the flex connector can be further modified.



11 Reattach the metal cover on the back of the monitor using the 7 screws. As you do so, route the picture signal cable through the recess that you prepared earlier as shown in the picture and secure the picture signal cable with a cable tie to prevent it from rubbing against the edges of the metal panel.



12 Carefully place the head unit back onto the rear of the monitor and secure it with the 6 screws.

2.3.3 Installation – Daughter PCB – All-in-One Head Unit in Seat and Skoda vehicles



Front of the All-in-One Head Unit (Skoda)



Rear view of the All-in-One Head Unit (Skoda)



1 Remove the all-in-one head unit and loosen the four screws on the back (two at the top and two at the bottom).



2 Loosen the two side screws and carefully remove the head unit from the monitor.



3 Loosen the 6 screws on the back of the monitor and remove the metal cover.

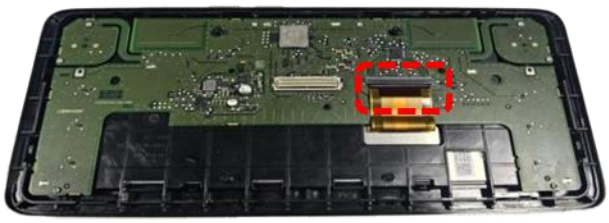

4 Unclip the 64-pin OEM ribbon cable coming from the monitor panel on the motherboard.

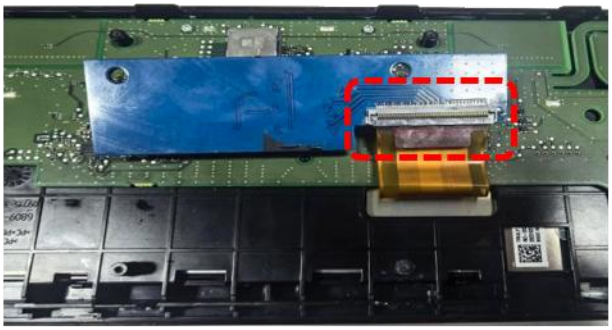

5 Snap the monitor panel's spare 64-pin OEM ribbon cable into the 64-pin ribbon cable socket **LCD** on the bottom of the daughter PCB.

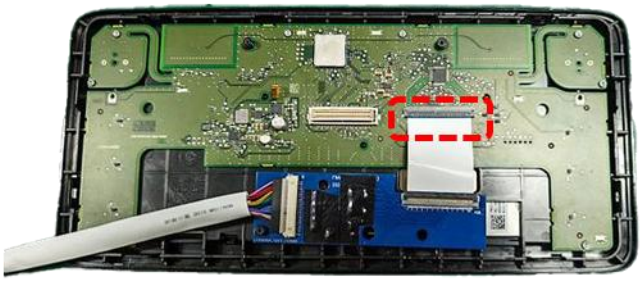

6 Snap the **short** 64-pin ribbon cables into the vacant 64-pin ribbon cable sockets on the motherboard.



7 Snap the opposite end of the **short** 64-pin ribbon cable into the 64-pin ribbon cable socket **PCB** on the top of the daughter PCB.

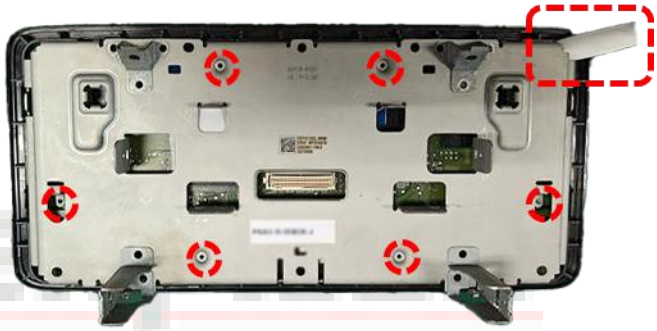

8 Reattach the metal cover on the back of the monitor using the 6 screws. Ensure that the picture signal cable is routed out at a suitable point.



9 Carefully place the head unit back onto the rear of the monitor and secure it with the 6 screws.

2.3.4 Installation – Daughter PCB – All-in-One Head Unit in VW vehicles



Front of the All-in-One Head Unit (VW)



Rear view of the All-in-One Head Unit (VW)



1 Remove the all-in-one head unit and loosen the four screws on the back (two at the top and two at the bottom).



2 Loosen the two screws on either side and carefully remove the head unit from the monitor.



3 Loosen the 7 screws on the back of the monitor and remove the metal cover.

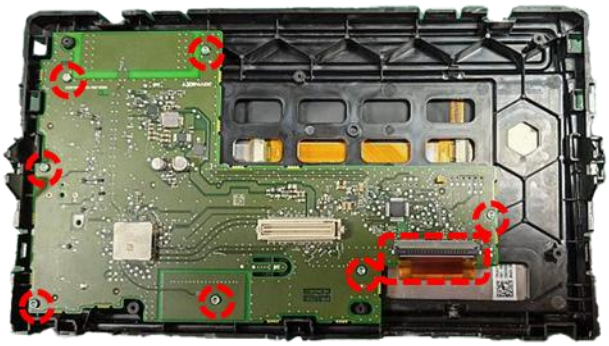

4 Unclip the 64-pin OEM ribbon cable from the monitor panel on the motherboard, loosen the 7 screws and carefully remove the motherboard.

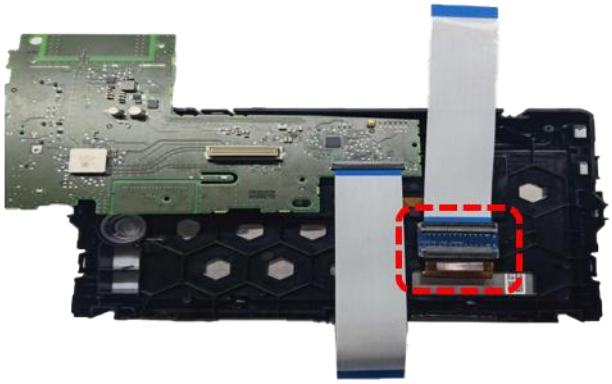

5 Snap the monitor panel's spare 64-pin OEM ribbon cable into the 64-pin ribbon cable socket on the flex connector.

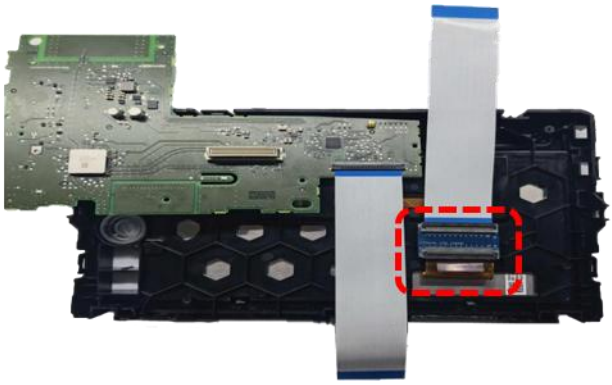

6 Snap one of the two **long** 64-pin ribbon cables into the 64-pin ribbon cable socket on the other side of the flex connector.

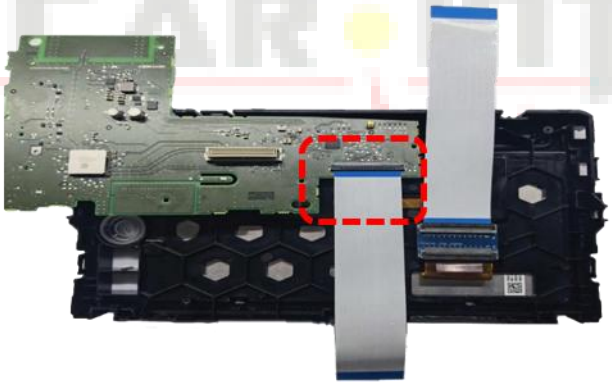

7 Snap the second **long** 64-pin ribbon cable into the vacant 64-pin ribbon cable socket on the motherboard.



8 Clip the second 64-pin ribbon cable, **coming from the motherboard**, into the 64-pin ribbon cable socket **PCB** on the top of the daughter PCB.



9 Snap the 64-pin OEM ribbon cable **from the monitor panel** – extended by the flex connector and the 64-pin ribbon cable – into the 64-pin ribbon cable socket **LCD** on the bottom of the daughter PCB.

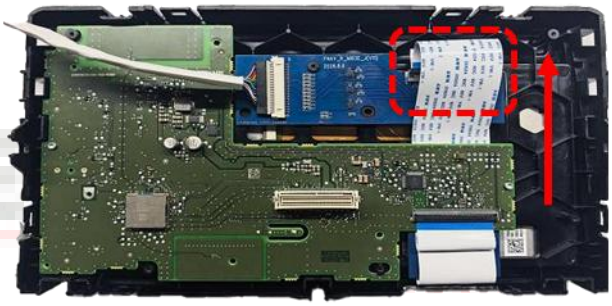

10 Carefully replace the motherboard, ensuring that the two 64-pin ribbon cables are routed upwards from beneath it.

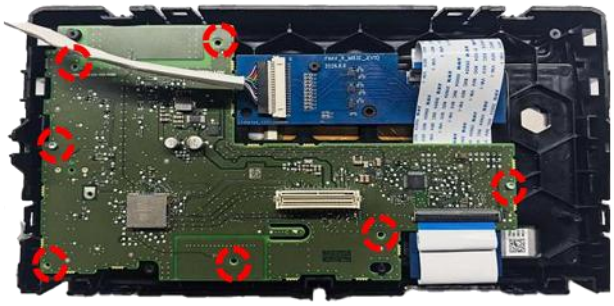



11 Secure the motherboard again using the 7 screws.

12 Reattach the metal cover on the back of the monitor using the 7 screws. Ensure that the picture signal cable is routed out at a suitable point.



13 Carefully place the head unit back onto the rear of the monitor and secure it with the 6 screws.

2.4 Connection – picture signal cable

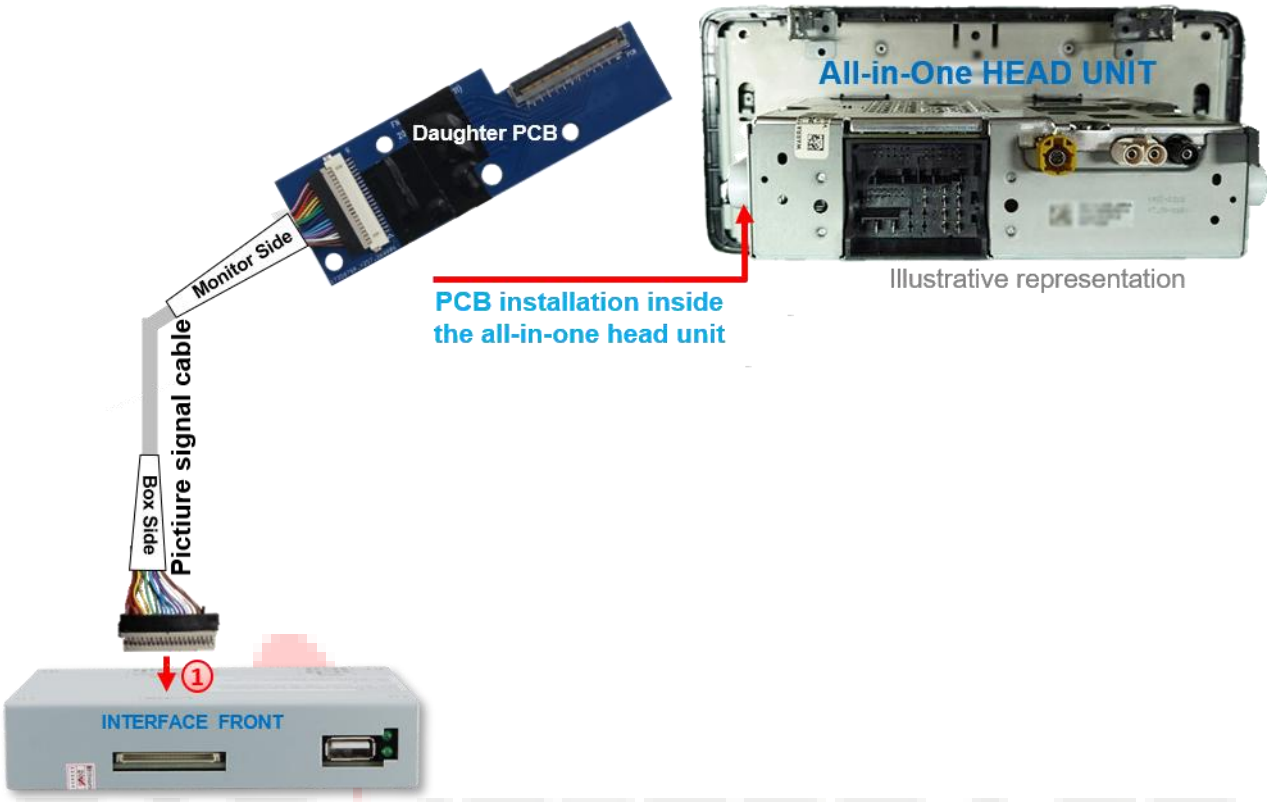

CAR INTERFACE

1. Connect the 20pin female connector "Box Side" of the picture signal cable pre-mounted on the daughter PCB to the 20pin male connector of the video interface.

2.5 Connection – cable sets, power supply and CAN bus or analogue without CAN bus

The interface can be integrated via CAN bus or operated completely analogue without connection to the CAN bus.
When integrated via CAN bus, the interface is switched on via this bus and reverse gear signals and turn signals are usually detected from this. In some vehicles, dynamic guide lines can then also be displayed based on the CAN bus steering signals.

In exceptional cases, CAN communication is not (fully) compatible. If no interface LED lights up after connecting the **10pin power/CAN cable set** with the ignition switched on, the analogue connection described below must be made. The analogue connection is also possible in order to avoid a possible subsequent CAN bus incompatibility. In this case, the interface must be switched on and switched to its inputs via +12V switch inputs.

The display of dynamic guide lines for the rear-view camera is not available with an analogue connection.

Regardless of whether the connection is made with CAN bus or analogue without CAN bus, the **black ground wire** and the **yellow +12V ACC/S contact wire** of the **10pin power/CAN cable** must always be connected.

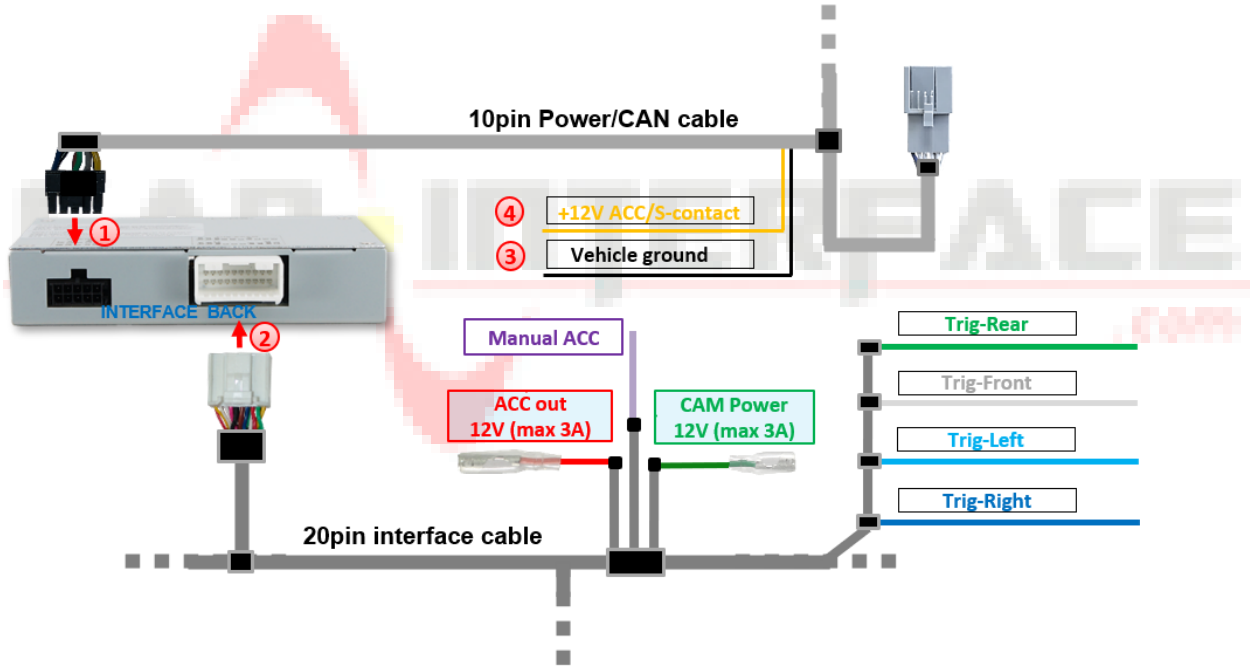

1. Connect the 10pin female connector of **the 10pin power/CAN cable** to the 10pin male connector of the interface.
2. Connect the 20pin female connector of **the 20pin interface cable** to the 20pin male connector of the interface.
3. Connect the black ground wire of **the 10pin power/CAN cable** to the vehicle ground.
4. Connect **the yellow +12V ACC/S contact wire** of **the 10pin power/CAN cable** to **+12V ACC (terminal 15r) or S contact (terminal 86s)** of the vehicle.

Note: Connection to the +12V battery (terminal 30) is also technically possible. However, in the event of (partial) CAN bus incompatibility or a defect, it cannot be ruled out that the interface will not switch off in sleep mode. Connection to the +12V battery (terminal 30) is at your own risk!

2.5.1 Connection with CAN bus

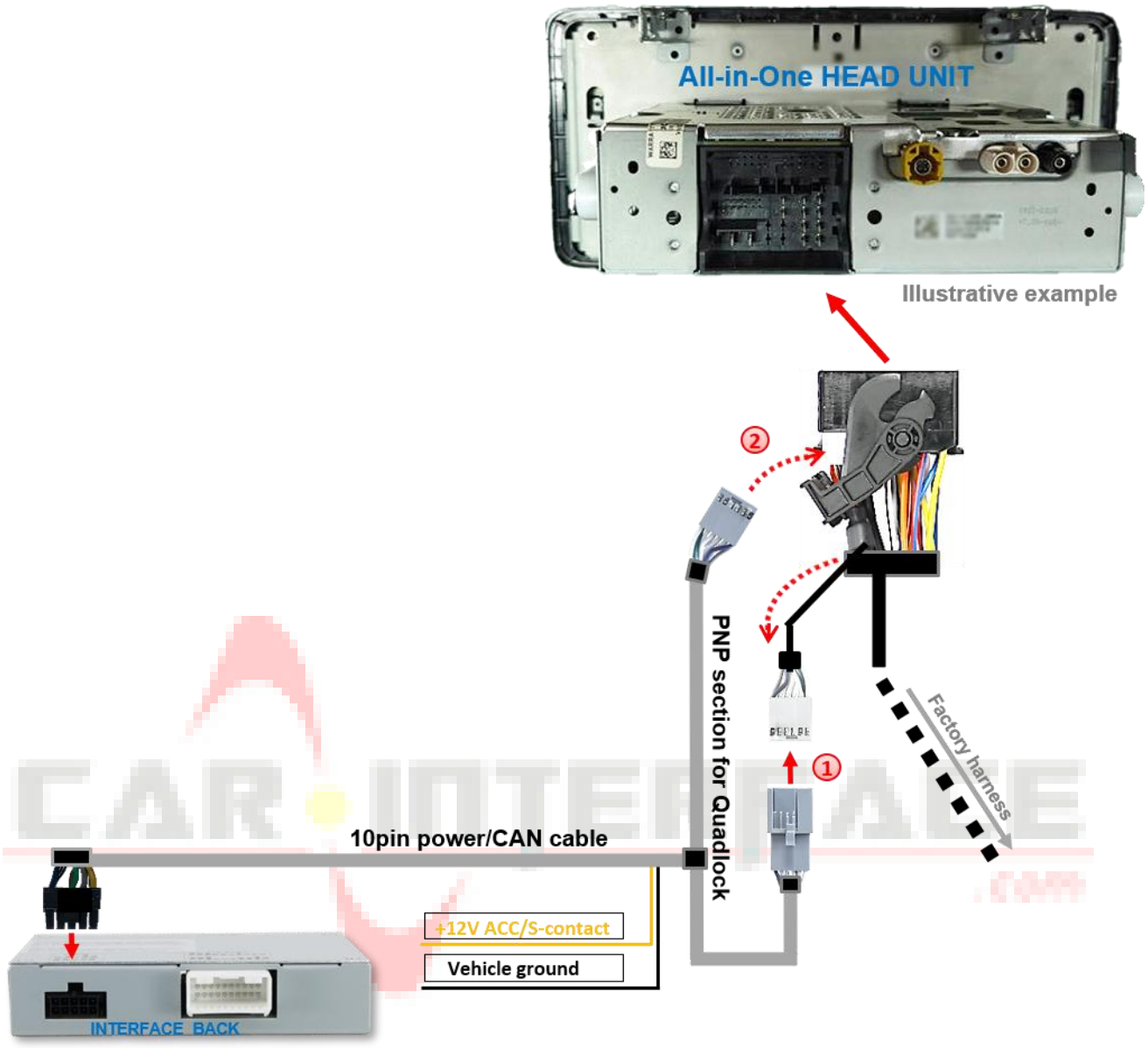

1. Disconnect the female Quadlock connector of the vehicle wiring harness at the rear of the head unit,unplug the 12pin female connector and connect it to the grey 12pin male connectors of the 10pin power/CAN cable.

2. Snap the grey 12-pin female connector of the 10pin power/CAN cable into the position previously vacated by the female Quadlock connector.

   Then reconnect the female Quadlock connector to the back of the head unit.

Attention!
Exceptionally, the CAN communication may not succeed in all vehicles. If, after connecting the 10pin power/CAN cable, no interface LED lights up while ignition is turned on, the analog connection described below must be made.

2.5.2 Analogue connection without CAN bus

With analogue connection, the four CAN wires of the 10pin power/CAN cable are not connected - for this, the four wires of the 10pin power/CAN cable must be disconnected!

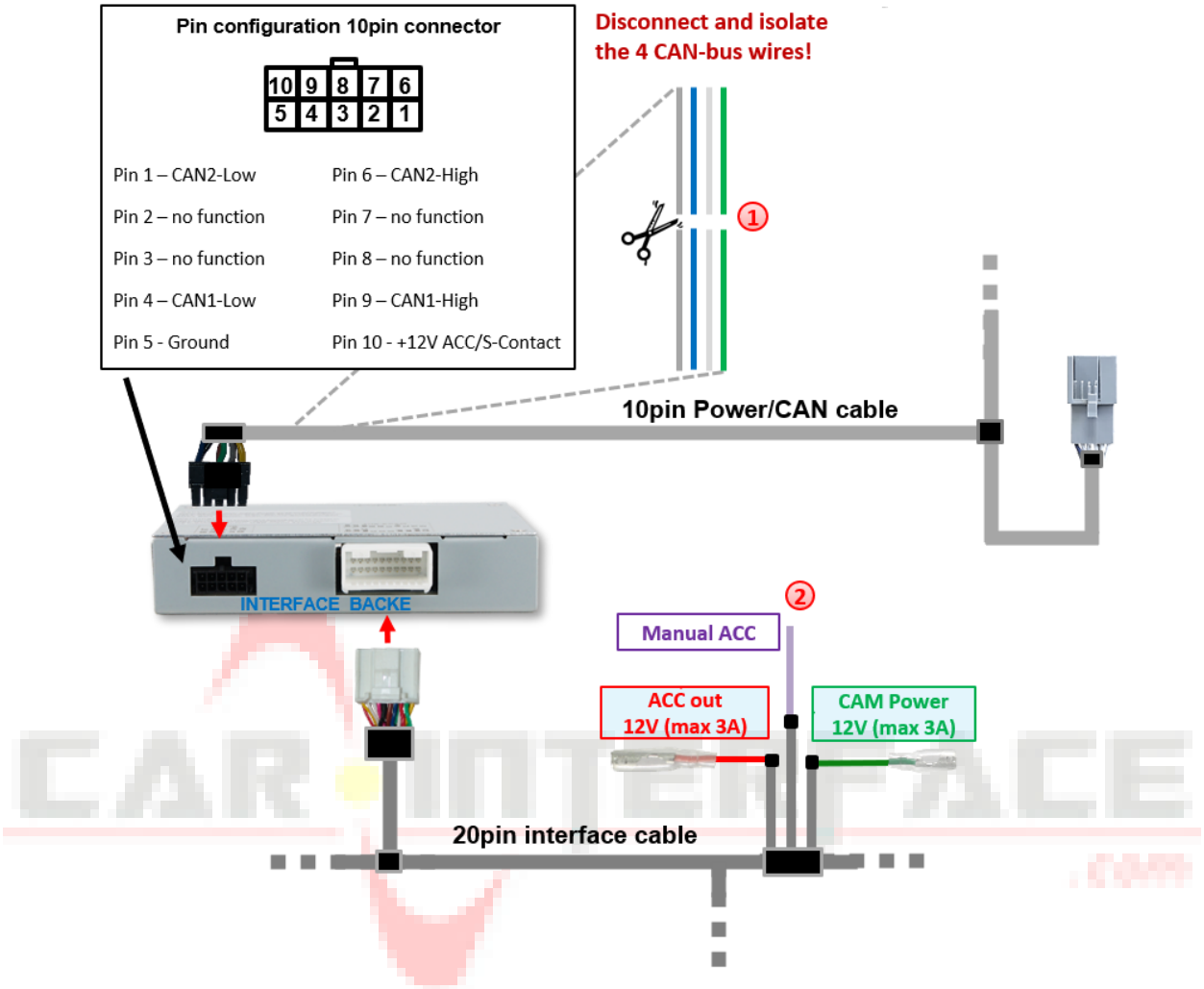

1 Disconnect and isolate the 4 CAN bus wires (grey, blue, white, green) of the 20pin interface cable about 4-5 cm behind the black connector.

2 Connect purple wire Manual ACC of 20pin interface cable to +12V S-contact terminal 86s or ACC terminal 15r of vehicle (e.g., cigarette lighter, glove compartment illumination).

Notes

- The screen is only switched on as long as the video interface is switched on via +12V to Manual ACC. Otherwise, the factory picture is also black.
  When selecting the switch-on signal, check whether the factory picture is available in all desired operating states.
- The display of dynamic guide lines is not available with an analogue connection.
- When connecting the interface via analogue connection (without CAN bus), the rear-view camera and side cameras must also be connected via analogue connection.
  See points:
  2.7.2 Case 2: Reverse gear signal from analogue signal
  2.9.2 Case 2: turn signals from analogue signal

2.6 Power supply outputs

The two **red** and **green** power supply lines **ACC out 12V (max 3A)** and **CAM Power 12V (max 3A)** of the 20pin interface cable can be used either as ACC power supply for the external video sources connected to **V1-Left**, **V2–Right**, or **V3–Front** connected **external video sources** (e.g. iOS/Android devices, laptop, streaming stick, DVB-T2 tuner), or as a power supply for the **after-market cameras** (e.g. side, front and rear-view camera) connected to **V1-Left**, **V2-Right**, **V3-Front** or **V4-Reverse**.

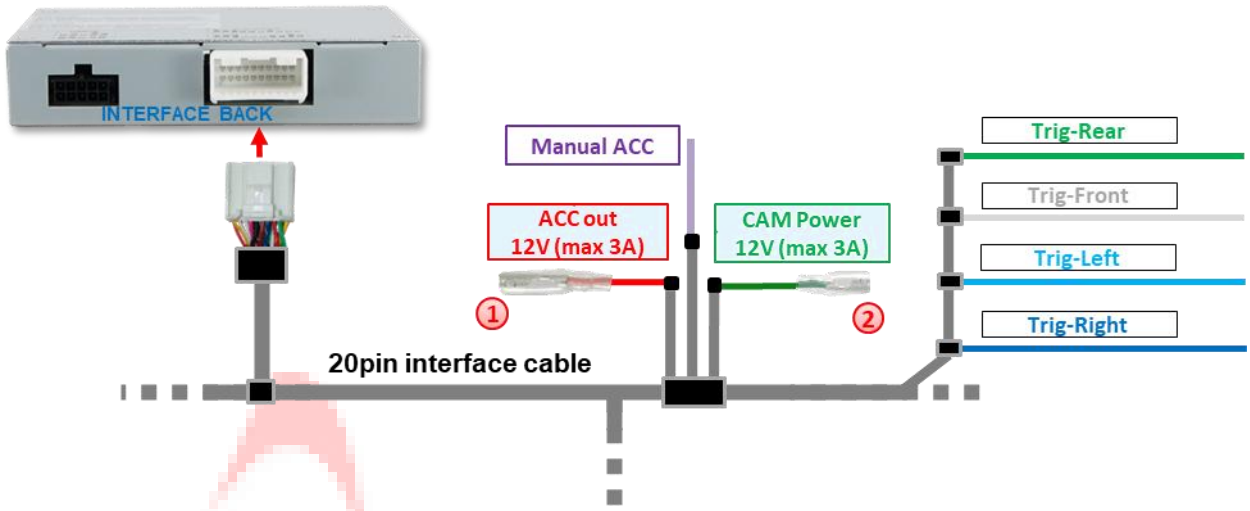

1 **External video sources** (not cameras) can be powered via the red **ACC out 12V (max 3A)** power supply line of the 20pin interface cable.
The wire carries a **permanent** +12V ACC switching output voltage while the interface is switched on *(see the following chapters for connection diagrams)*.

2 The power supply for **aftermarket cameras** (e.g. rear, side and front cameras) can be provided via the green power supply line **CAM Power 12V (max 3A)** of the 20pin interface cable. The wire carries **+12V switching output voltage** only as long as one of the camera inputs is displayed ( ), regardless of whether the connection is made via the vehicle CAN bus or via one of the trigger cables *(,) (see the following chapters for connection diagrams)*.

2.6.1 Connection and power supply - Video sources
Rear-view camera, front camera and 2 side cameras

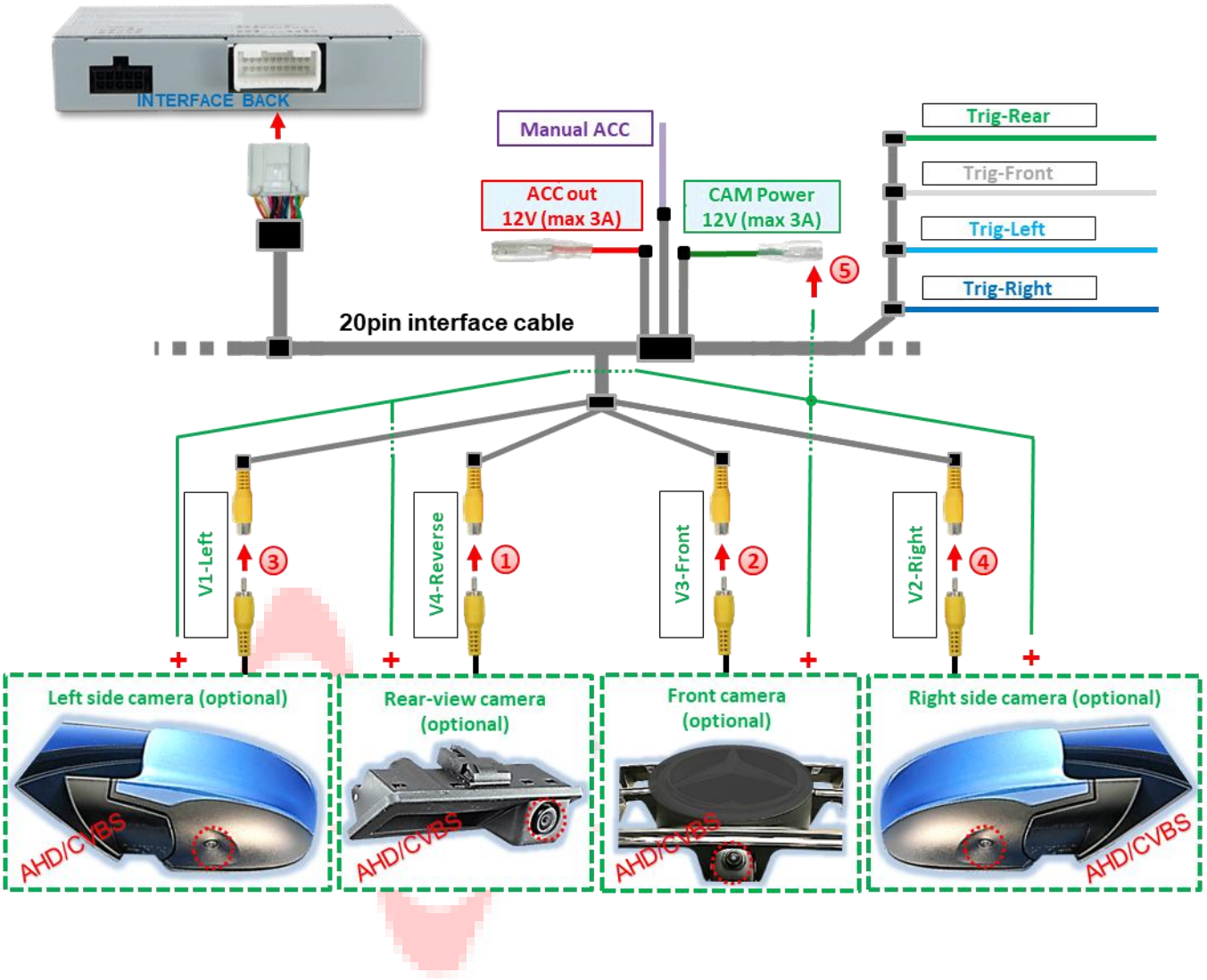

1. Connect the RCA plug of the rear-view camera to the RCA female connector **V4-Reverse** of the 20pin interface cable.
2. Connect the RCA male connector of the front camera to the RCA female connector **V3-Front** of the 20pin interface cable.
3. Connect the RCA male connector of the left side camera to the RCA female connector **V1-Left** of the 20pin interface cable.
4. Connect the RCA male connector of the right side camera to the RCA female connector **V2-Right** of the 20pin interface cable.
5. Connect the power supply for all aftermarket cameras to **the green wire. CAM Power 12V (max 3A)** of the 20pin interface cable.

Attention!
The video signal type of each video source must be defined in the OSD menu of the corresponding video input.

Note: The type of camera selection (via vehicle CAN bus or trigger lines) can be preset individually for each input in the OSD menu settings **for** each input.

2.6.2 Connection and power supply - Video sources rear-view camera, front camera and 2 video sources

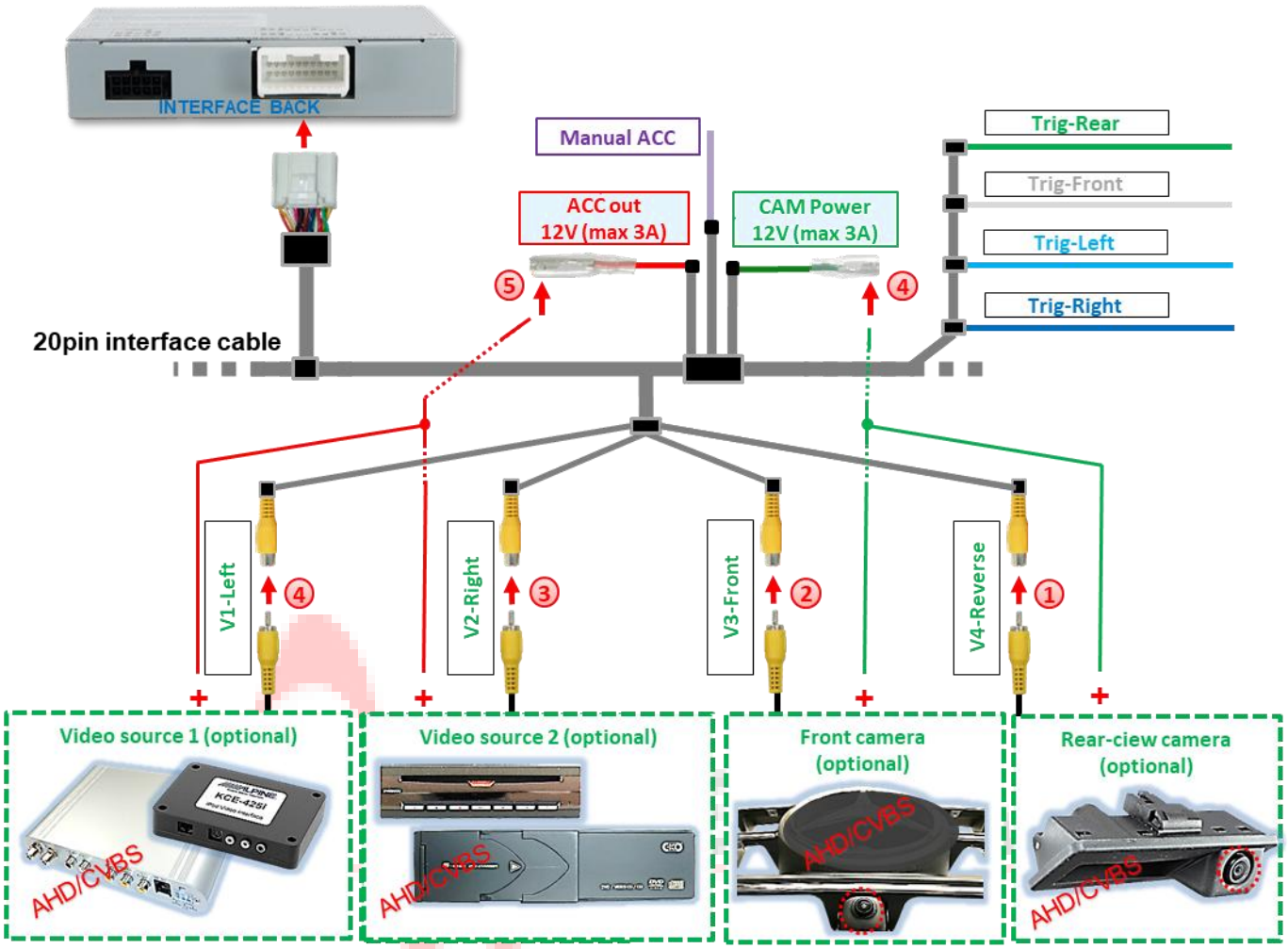

1. Connect the RCA male connector of the rear-view camera to the RCA female connector **V4-Reverse** of the 20pin interface cable .
2. Connect the RCA male connector of the front camera to the RCA female connector **V3-Front** of the 20pin interface cable.
3. Connect the RCA male connectors of video sources 1 and 2 to the RCA female connectors **V1-Left** and **V2-Right** of the 20pin interface cable.
4. Connect the power supply for aftermarket cameras to **the green wire of the CAM Power 12V (max 3A)** of the 20pin interface cable.
5. Connect the power supply for video sources to **the red wire ACC out 12V (max 3A)** of the 20pin interface cable.

Note: The type of camera selection (via vehicle CAN bus or trigger lines) can be preset individually for each input in the OSD menu settings **for** each input.

Attention!
The video signal type of each video source must be defined in the OSD menu of the corresponding video input.

2.7 Aftermarket rear-view camera

Automatic switching to the rear-view camera can be done via the CAN bus or an analogue reverse gear signal.

2.7.1 Case 1: Reverse gear signal from CAN bus

The basic requirement is that the interface connection has been made with the CAN bus. Furthermore, the vehicle CAN bus reverse gear signal and detection by the interface must be compatible. The interface then supplies +12V on the **green wire CAM Power 12V (max 3A)** of **the 20pin interface cable** while reverse gear is engaged, and the interface automatically switches to the rear-view camera input **V4-Reverse** .
See also chapter1.4 Settings – 8 dip switch bench (interface functions) .

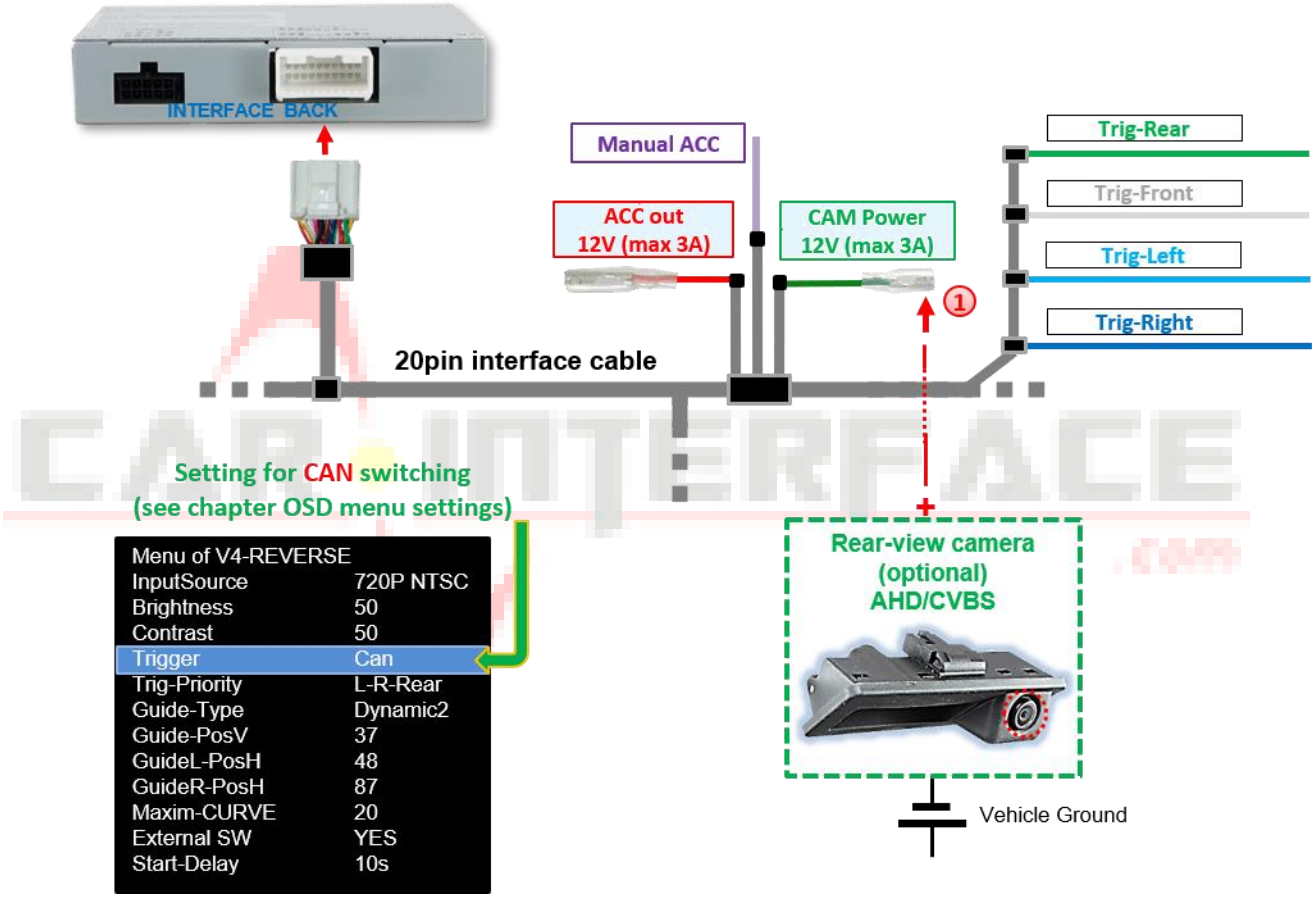

1 The +12V power supply for the aftermarket rear-view camera can be provided via the **green wire CAM Power 12V (max 3A)** of **the 20pin interface cable**, as this wire only carries current when camera inputs are switched on (some cameras are not stable under continuous current).

Notes

- If the reverse gear detection of the interface on the CAN bus does not work , the reverse gear signal must be connected in an analogue manner.

2.7.2 Case 2: Reverse gear signal from analogue signal

If the interface is connected without a CAN bus or if the interface does not supply +12V to the **green CAM Power 12V (max 3A) wire** of the 20-pin interface cable while reverse gear is engaged (not all vehicles are compatible), an external switch signal from the reversing light is required. As the reversing signal contains electronic interference, a normally open relay (e.g. AC-MR-312 or AC-MR-201) or a noise filter (e.g. AC-PNF-RVC) is required. The following diagram shows the use of a normally open relay.

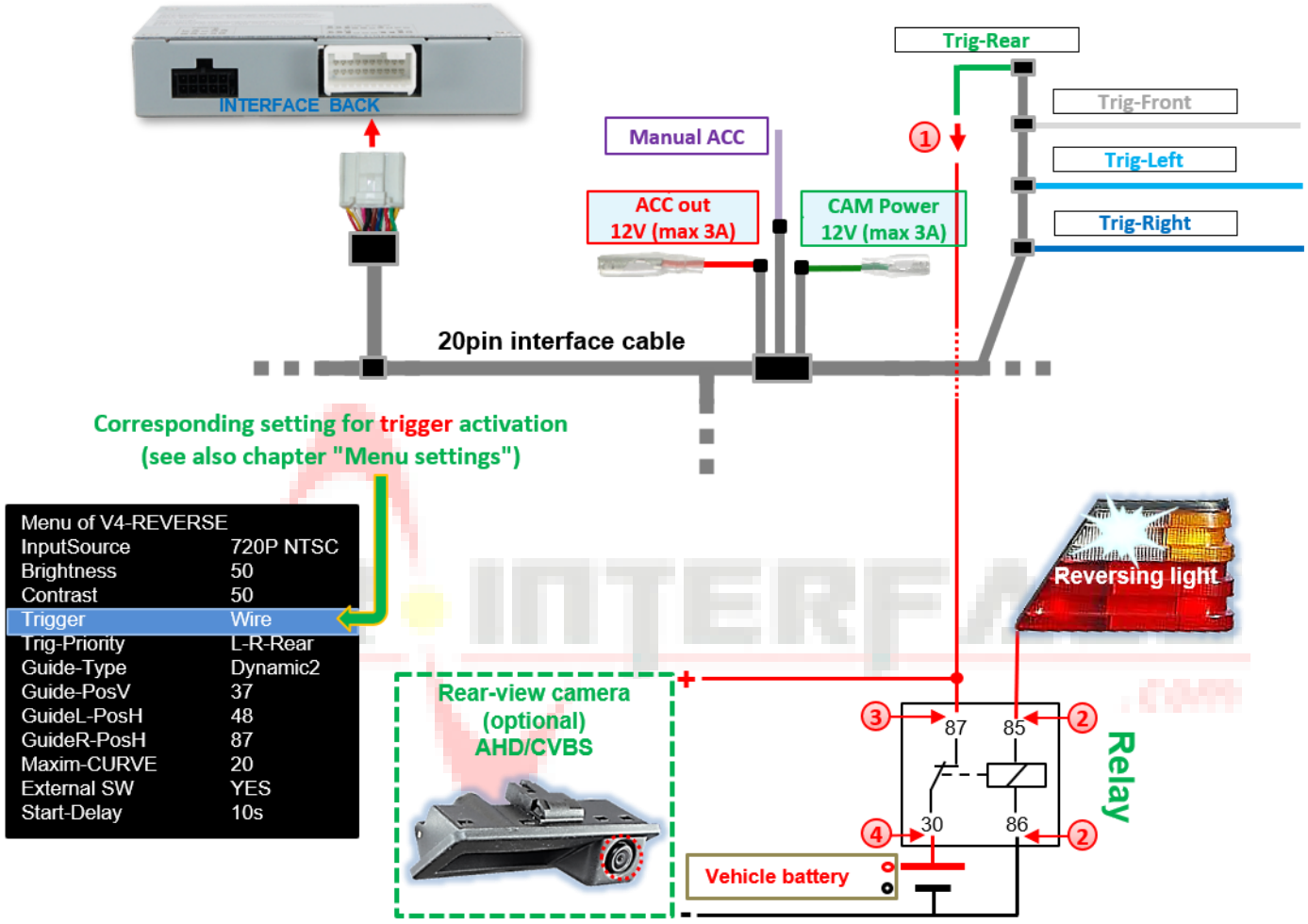

1. Connect **the green wire ( ) and Trig-REAR** ( ) to output terminal (87) of the relay.
2. Connect the reversing light power cable to the switching coil terminal (85) and the vehicle ground to the switching coil terminal (86) of the relay.
3. Connect the rear-view camera power supply wire to the output terminal (87) of the relay, in addition to **the green Trig-REAR wire.**
4. Connect the +12V continuous current to the input terminal (30) of the relay.

Note: For analogue connection, set the "Trigger" menu item in the OSD menu to "Wire"!

2.8 Aftermarket front camera

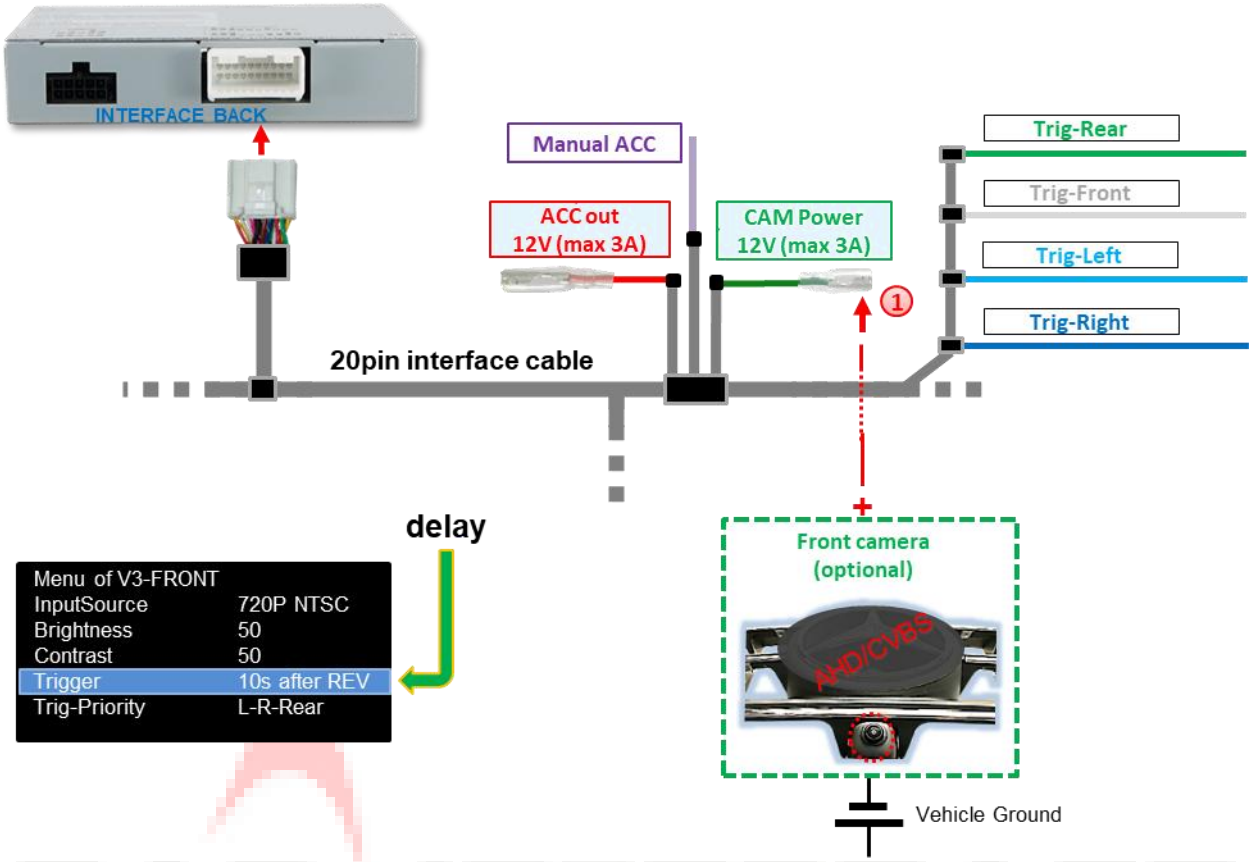

1 The **green CAM Power 12V (max. 3A) wire** can be used to supply power to the front camera (and all other cameras connected to the video inputs). This only carries current for the duration of any camera activation (some cameras are not stable with continuous current). The prerequisite is that Dip 3 = **ON** (black 8 dip switch bench). The **green wire** then supplies +12V (max. 3A) as power for the front camera as long as the front camera input is displayed.
The delay time can be individually selected for **5**, **10**, **15** or **20** seconds in the OSD menu settings of the front camera.

Switching to the front camera after reverse gear is engaged for the time set in the OSD menu occurs when a reverse gear signal is received from the CAN bus and with an analogue connection.

Note: It is also possible to switch manually to the front camera input (short press) from any picture mode using an external keypad (see chapter *3 Operation of the video interface*).

2.9 Aftermarket side cameras

Side cameras can be connected via CAN bus or analogue selection.

2.9.1 Case 1: Flashing turn signals from CAN bus

The basic requirement is that the interface connection has been made with CAN bus. Furthermore, vehicle CAN bus turn signals and their recognition by the interface must be compatible. Then, for the duration of a turn signal operations, +12V is applied to the **green CAM Power 12V (max 3A) wire** of the **20pin interface cable**.

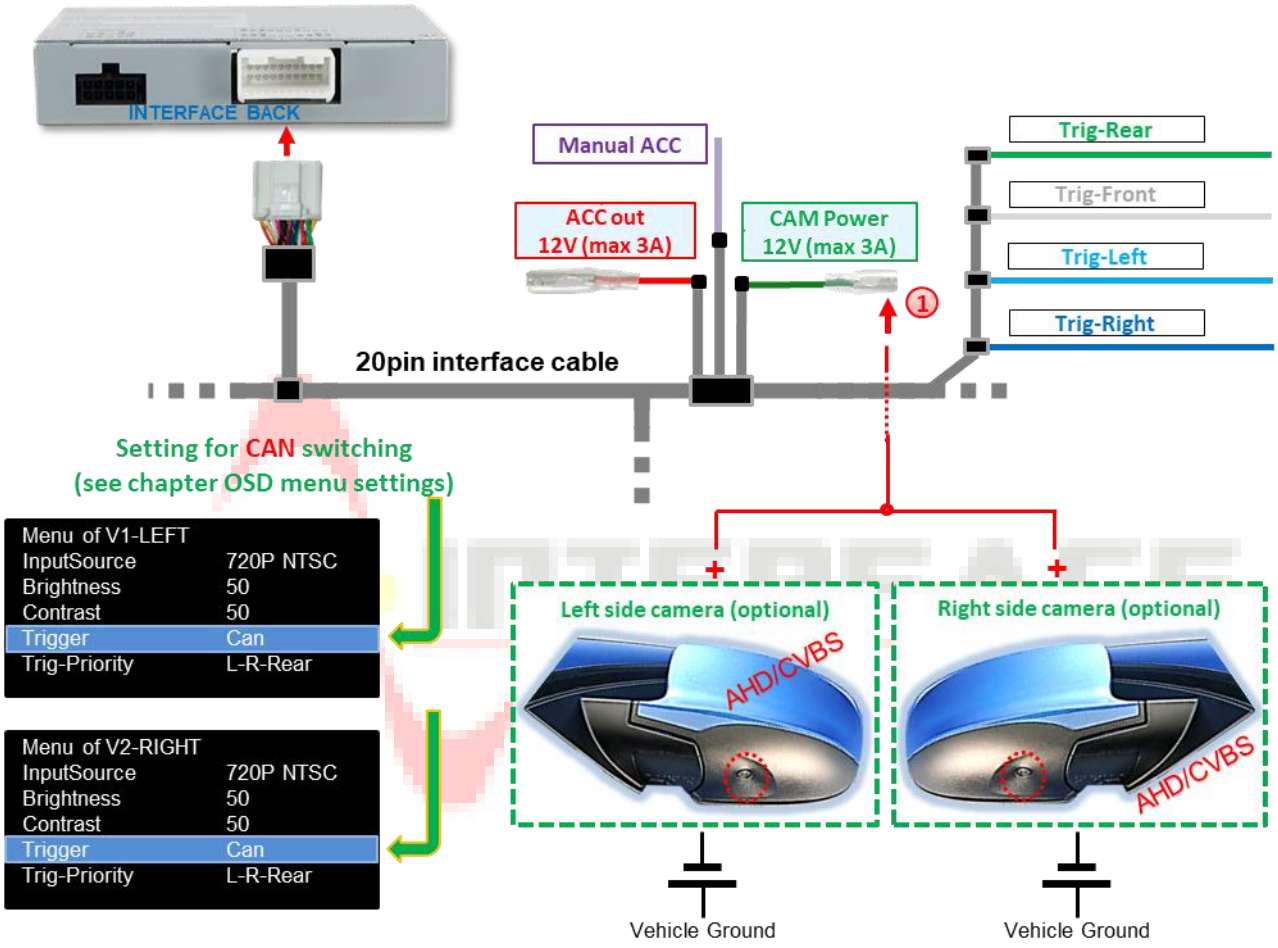

1 Power for the side cameras can be supplied via **the green CAM Power 12V wire (max 3A)** of **the 20pin interface cable**, as this wire only carries current during camera activation (some cameras are not stable under continuous current).

Note: If the interface's flashing signal detection on the vehicle CAN bus does not work, the turn signals must be connected in an analogue manner.

2.9.2 Case 2: turn signals from analogue signal

If the interface is connected without a CAN bus, or if the turn signals from the vehicle CAN bus are not recognised when the interface is connected with a CAN bus, analogue activation of the side camera inputs is possible via the +12V switching input lines **Trig-Left** and **Trig-Right**. An external switching signal from the turn signal bulbs is required to switch to the side camera inputs. Since turn signals may contain electronic interference, a normally open relay (e.g. AC-RW-1230 with AC-RS5 cabling) or a noise filter (e.g. AC-PNF-RVC) is required for each input. The diagram below shows the use of a normally open relay.

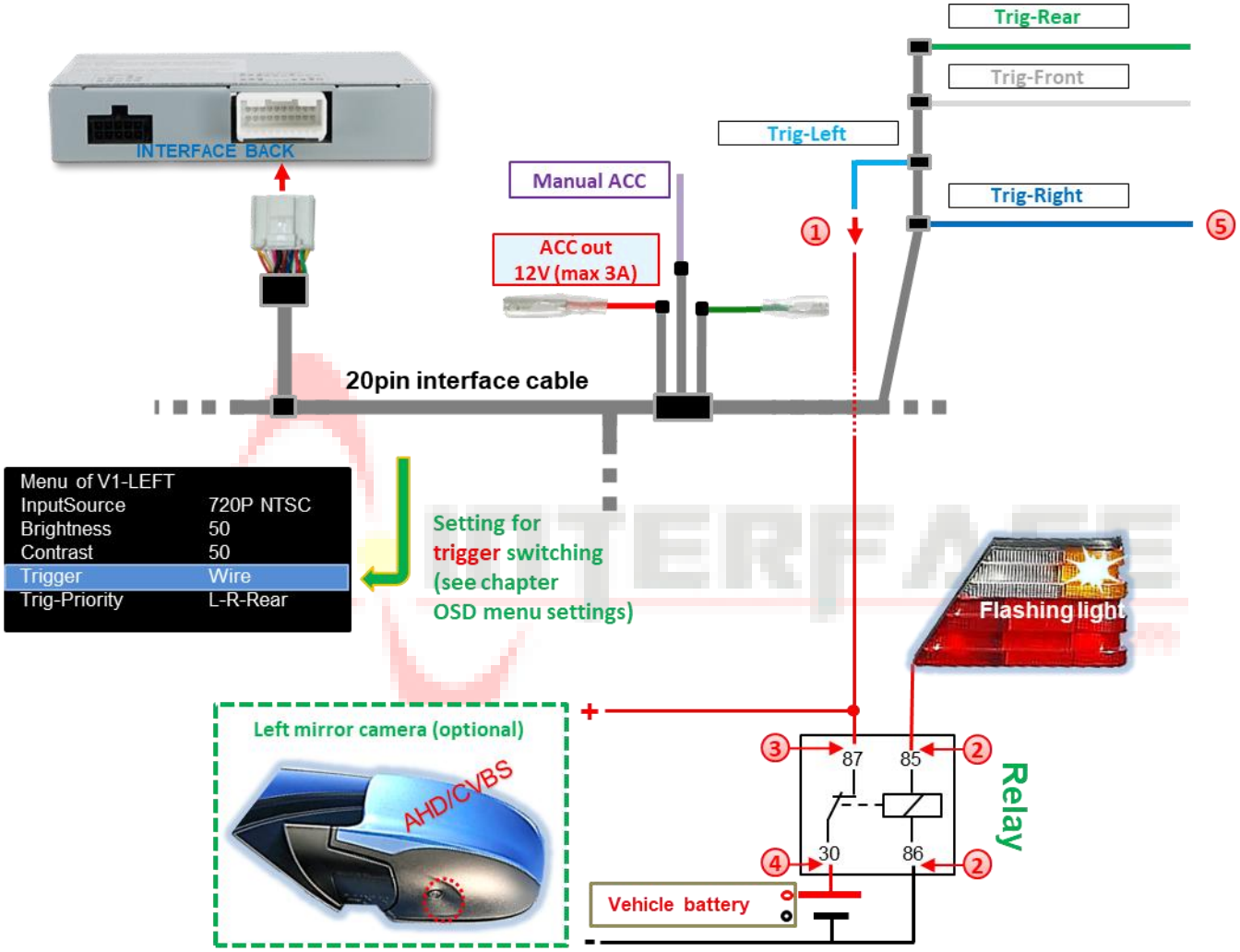

1. Connect **the light blue wire Trig-Left** to the output terminal (87) of the relay.
2. Connect the indicator cable of the left indicator to the relay's switching coil terminal (85) and the vehicle ground to the relay's switching coil terminal (86).
3. Connect the left side camera power cable to the output terminal (87) of the relay, in addition to **the light blue wire Trig-Left**.
4. Connect the +12V continuous current to the input terminal (30) of the relay.
5. The same connection method applies to the right side camera via **the dark blue Trig-Right wire**.

2.10 Audio insertion

The interface can only insert video signals into the factory infotainment system. For all connected AV sources, their audio output must be connected to the factory AUX input (if available) or an optional audio feeder (e.g. FM modulator).

If several AV sources are connected to the infotainment system, an additional audio switch may be necessary. Input video signals can be activated in parallel with any audio mode of the factory infotainment system.

CAR INTERFACE .com

2.11 Connection – video interface and external keypad

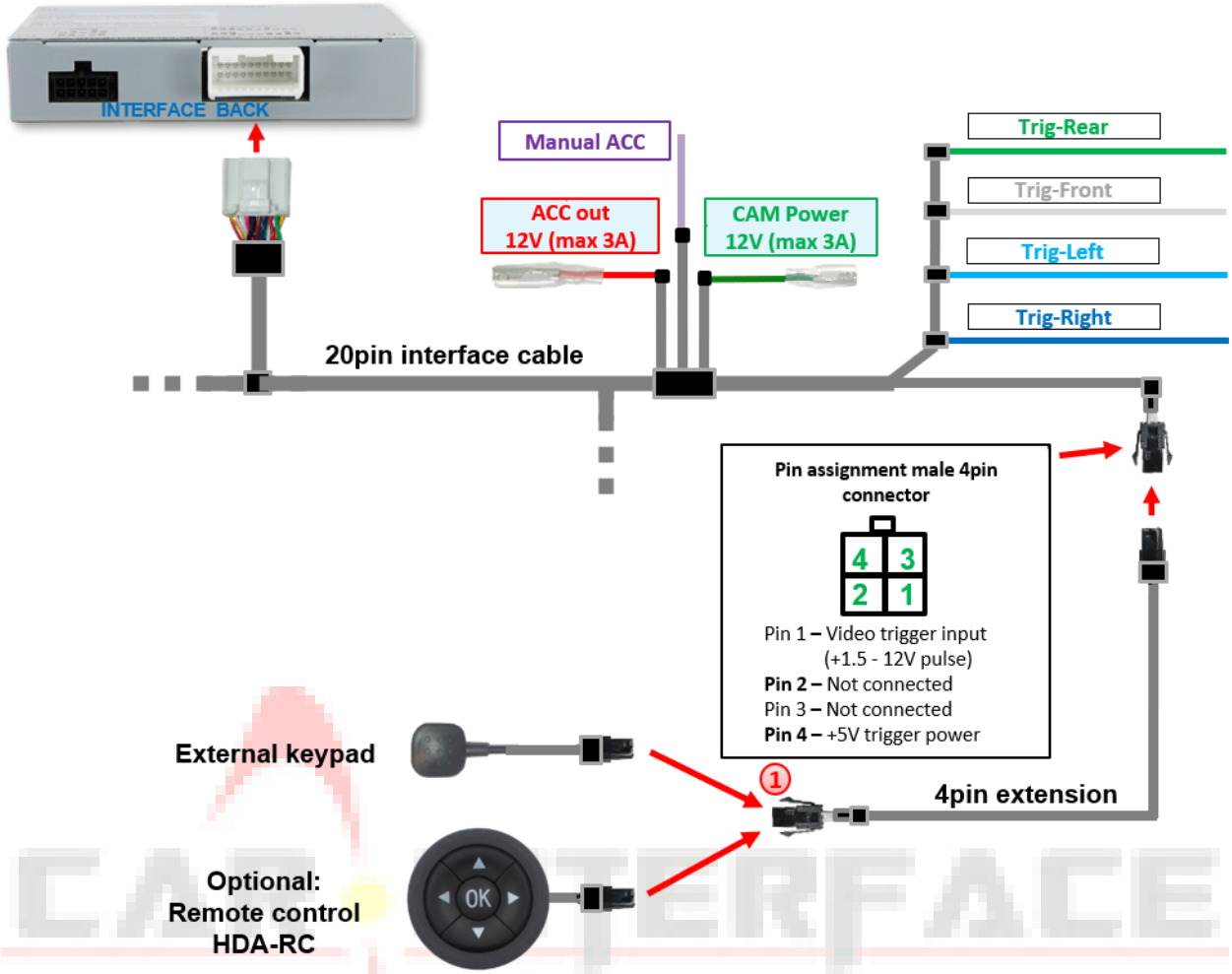

1 Connect the 4pin female connector of the external keypad to the 4pin male connector of the 20pin interface cable.

Note: The keypad cable is supplied with an extended 4pin connector. **We strongly recommend that you install this connector in an accessible location, leave the supplied keypad connected to it, and document the installation location for future reference – even if the keypad is not required for switching between multiple sources.**

This may be particularly important for support purposes or if settings are to be adjusted in the interface's OSD menu after installation, e.g. using the optionally available "HDA-RC" remote control. If the 4pin connector is installed in an accessible location, the interface itself no longer needs to be accessed for subsequent setting changes.

The keypad should not be fitted in a 'pressed' position, but should remain loose and accessible at the connection point.

Optional: Instead of the external keypad, the interface can also be operated using the optionally available "HDA-RC" remote control.* This allows direct selection of the video/camera inputs and more convenient changing of the settings in the respective OSD menus.



"HDA-RC" remote control optionally available

* The remote control is compatible with all HDA and HDV interfaces that are marked with 'RC' at the end of the software version.

2.12 Settings OSD menu

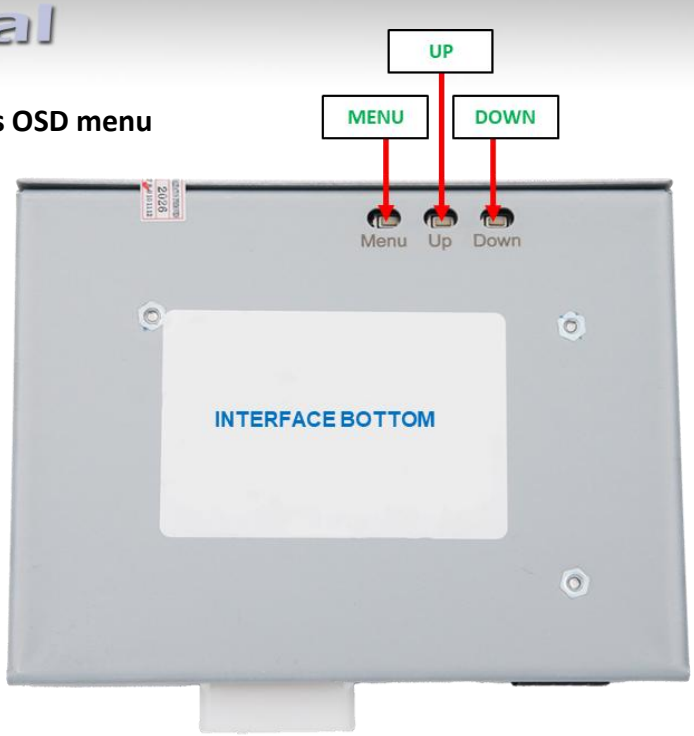

Attention!
The video signal type of each video source must be defined in the OSD menu of the corresponding video input.

OSD menu settings can be changed using the 3 keys on the rear of the interface. MENU opens the OSD settings menu or moves the cursor to the next menu item. UP and DOWN change the values of the current menu item.

The individual OSD settings menu for each video input can only be accessed while it is displayed, regardless of whether a video source is connected.

The following settings are available in the OSD settings menus of the 5 video inputs:

8-pin DIP switch bank DIP 1 (DIP 2) = ON

Menu V1-Left (V2-Right)

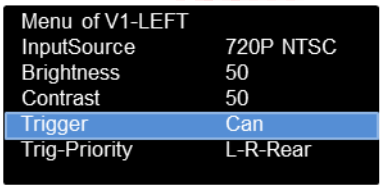

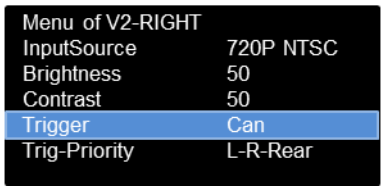

Input Source Video input signal type for video source connected to V1-Left (V2-Right).
This **must** be defined for correct image reproduction.
The following video source signal types can be selected:
CVBS video sources: **NTSC, PAL**
AHD video sources: **720p NTSC, 960p NTSC, 720p PAL, 960p PAL**

Brightness Brightness

Contrast Contrast

Pos. H Horizontal image position

Pos. V Vertical image position

Trigger Type of video input selection V1-Left (V2-Right)
"CAN" function for side cameras via CAN bus. Selection of video input V1-Left (V2-Right) when the left (right) turn signal is activated. This requires that the turn signal is recognised by the interface on the vehicle CAN bus. Manual selection of this input via an external keypad does not work with this setting.
"Wire" function for other video sources or side cameras without CAN bus. Selection of video input V1-Left (V2-Right) is only possible via the light blue (**dark blue**) Trig-Left (**Trig-Right**) wire or manually via an external keypad.

Trig priority Priority of switching when switch signals are present for several inputs at the same time (CAN bus or analogue +12 V trigger). The signal with the highest priority is displayed:
L-R-Rear: *V1-Left* → *V2-Right* → *V4-Reverse*
Rear-R-L: *V4-Reverse* → *V2-Right* → *V1-Left*

V3 front menu **8 dip switch bench** DIP 3 = ON

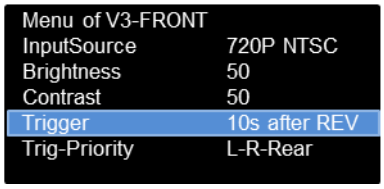

Input Source Video input signal type for video source connected to **V3 front**.
This **must** be defined for correct image reproduction.
The following video source signal types can be selected:
CVBS video sources: **NTSC, PAL**
AHD video sources: **720p NTSC, 960p NTSC, 720p PAL, 960p PAL**

Brightness Brightness

Contrast Contrast

Trigger Type of selection for video input **V3 front**.
Delay function for front camera. The delay setting determines the automatic switching of a front camera connected to the V3 front input after reverse gear is engaged, as well as its display duration on the screen. The following options are available
5s after REV, 10s after REV, 15s after REV, 20s after REV.
"Wire" function for other video sources. If a video source other than a front camera is to be connected to **V3 front**, select the "Wire" setting. This deactivates the "Delay" function and the input can only be selected via the white Trig-Front wire or manually via an external keypad.

Trig priority Priority of switching when switch signals are present for several inputs at the same time (CAN bus or analogue +12 V trigger). The signal with the highest priority is displayed:
L-R-Rear: ***V1-Left*** → ***V2-Right*** → ***V4-Reverse***
Rear-R-L: ***V4-Reverse*** → ***V2-Right*** → ***V1-Left***

CAR INTERFACE .com

V4-Reverse menu **8 dip switch bench** Dip 4 = ON, Dip 5 = OFF, Dip 6 = OFF

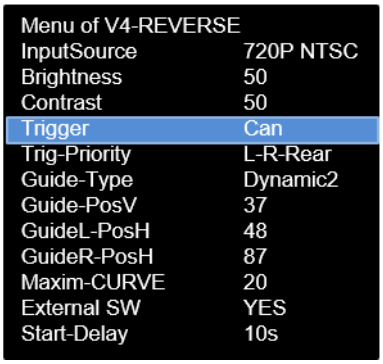

Input Source Video input signal type for video source connected to **V4 Reverse**. This **must** be defined for correct image reproduction . The following video source signal types can be used :
CVBS video sources: **NTSC, PAL**
AHD video sources: **720p NTSC, 960p NTSC, 1080p NTSC, 720p PAL, 960p PAL, 1080p PAL**

Brightness Brightness

Contrast Contrast

Trigger Type of selection for rear-view camera input **V4 reverse**.
"CAN" function with CAN bus connection. With the "CAN" setting, the system automatically switches to **V4 Reverse** for CVBS/AHD rear-view camera when reverse gear is engaged. This requires the interface to recognise reverse gear in the CAN bus.
"Wire" function with analogue connection. A rear-view camera connected to **the V4 Reverse** can be selected via the **green Trig Left wire** using either the **"Wire"** or **"CAN"** setting. We recommend setting **"Wire"** for analogue (reversing signal) connections.

Trig priority Priority of switching when switch signals are present for several inputs at the same time (CAN bus or analogue +12 V trigger). The signal with the highest priority is displayed:
L-R-Rear: ***V1-Left*** → ***V2-Right*** → ***V4-Reverse***
Rear-R-L: ***V4-Reverse*** → ***V2-Right*** → ***V1-Left***

Guide Type Setting of 6 different angles for the guide lines for the rear-view camera

Dynamic guide lines	**Dynamic 1-6**
Fixed guide lines	**Fixed 1-6**
No guide lines	**OFF**

Guide pos. V	Vertical position of the guide lines	**00-69**
Guide L Pos.H	Horizontal position of the left guide line	**00-90**
Guide R Pos.H	Horizontal position of the right guide line	**00-121**
Maximum CURVE	Radius of the guide lines	**01-20**

External SW Selectable via external keypad **V4 Reverse**
YES: *Factory video* → ***V1-Left + V2-Right*** → ***V1-Left*** → ***V2-Right*** → ***V3-Front + V4-Reverse*** → ***V3-Front*** → ***V4-Reverse*** → *Factory video*
NO: *Factory video* → ***V1-Left + V2-Right*** → ***V1-Left*** → ***V2-Right*** → ***V3-Front + V4-Reverse*** → ***V3-Front*** → *Factory video*

Start delay Switchover delay of the interface at start-up. This function is technically necessary in some vehicles, as otherwise malfunctions of the factory system may occur (e.g. black screen, touch problems). The following options are available (in seconds):
5s/6s/7s/8s/9s/10s/12s/15s/20s
Changing the default settings may lead to malfunctions!

3 Operation of the video interface

The external keypad can be used to switch between all activated inputs.

- Long press of the keypad (2-3 seconds)

When pressed and held (2-3 seconds), the external keypad switches from the factory video to the first activated interface video input. Each additional long press switches to another activated interface video input until the last one is reached, at which point it switches back to the factory video. Deactivated inputs are skipped. If all inputs are activated via the corresponding dip switch, the order is as follows:

Factory video → ***V1-Left + V2-Right*** → ***V1-Left*** → ***V2-Right***
→ ***V3-Front + V4-Reverse*** → ***V3-Front*** → ***V4-Reverse**** → *Factory video*

****V4-Reverse*** can only be selected via the external keypad if the "External SW" function is set to "Yes" in the **V4-Reverse** menu.

- Briefly press the keypad (only possible if Dip 3 is set to ON).

When pressed briefly, the external keypad switches from the current video mode to the front camera input **V3-Front**; pressing it briefly again switches back to the previous video mode.

Note: Even if the keypad is not needed to switch between multiple sources, it is strongly recommended that the keypad be connected and remain hidden on the interface. The keypad should not be installed in a "pressed" position.

3.1 Optional: Operating the video interface via the "HDA-RC" remote control



"HDA-RC" remote control optionally available

Instead of the external keypad, the interface can also be operated via the optionally available "HDA-RC" remote control.* This allows direct selection of the video/camera inputs and more convenient changing of the settings in the respective OSD menus.

* The remote control is compatible with all HDA and HDV interfaces that are marked with 'RC' at the end of the software version.

4 Specifications

BATT/ACC range	9V - 16V
Stand-by power drain	approx. 1mA
Power consumption	approx. 150mA
Video input	0.7V - 1V
Video input signal types	CVBS/AHD
Signal standards FBAS/AHD	NTSC/PAL
Temperature range	-40°C to +85°C
Interface box dimensions	117 x 25 x 97 mm (W x H x D)
Dimensions of daughter PCB	115 x 7 x 35mm (W x H x D)

5 FAQ – Troubleshooting interface functions – product-specific

Problem	Possible cause	Solution
Vehicle battery discharges	Power connection made to battery terminal 30	See chapter *2.5 Connection – cable sets, power supply and CAN bus or analogue without CAN bus*– connection of the 10pin power/CAN cable
Malfunction or no picture	Video input signal type for video source not defined in the OSD of the respective video input	See chapter*2.12 Settings OSD menu* - menu of the respective input

CAR INTERFACE .com

6 FAQ - Troubleshooting Interface functions - general

For any troubles which may occur, check the following table for a solution before requesting support from your vendor.

Symptom	Possible reason	Possible solution
No picture/black picture (factory picture).	Not all connectors have been reconnected to factory head-unit or monitor after installation.	Connect missing connectors.
	CAN-bus wires connected to CAN-bus in wrong place.	Refer to the manual where to connect to the CAN-bus. If not mentioned, try another place to connect to the CAN-bus.
	No power on video-interface (all LED video-interface are off).	Check power connection of interface.
No picture/black picture/white picture (inserted picture) but factory picture is OK.	No picture from video source.	Check on other monitor whether video source is OK.
	No video-source connected to the selected interface input.	Check settings dips 1 to 5 of 8dip bench of video interface which inputs are enabled and switch to corresponding input(s).
	Setting of video signal type of active video input is not equal to video signal type of connected video-source.	Set the video signal type of the video source correctly in the OSD menu of the corresponding input.
	LVDS cables plugged in wrong place.	Double-check whether order of LVDS cables is exactly connected according to manual. Plugging into head-unit does not work when the manual says to plug into monitor and vice versa.
Inserted picture totally wrong size or position.	Wrong settings of video-interface.	Verify the vehicle-specific dip switch position in the instructions. If necessary, test different positions of the vehicle-specific dip switches. Perform a power reset after each change (briefly remove the black 10-pin micro-fit power socket once).
Inserted picture double or multiple times on monitor.		
Inserted picture distorted, flickering or running vertically.	Video sources output set to AUTO or MULTI which causes a conflict with the interfaces auto detection.	(Only concerns video-sources with selectable output – e.g., DVD-Players, TV-Tuners, etc.) Set video source output fixed to PAL or NTSC. It is best to set all video sources to the same video signal type output.
	If error occurs only after source switching: Connected sources are not set to same video signal type output.	Set all video sources to the same video signal type output.
Inserted picture b/w.	Setting of video signal type of active video input is not equal to video signal type of connected video-source.	Set the video signal type of the video source correctly in the OSD menu of the corresponding input.

Symptom	Possible reason	Possible solution
Only on first inserted video activation after IGN on, the inserted picture is distorted.	Menu item *Trigger* of the corresponding video-input is set to *CAN-bus* though analogue signal triggering is used.	Open OSD-menu of corresponding video input and set the menu item *Trigger* to *Wire.*
Inserted picture qual. bad.	Picture settings have not been adjusted.	Use the 3 switches on interface-box or optional HDA-RC cable remote control to set the desired picture settings for the respective video source in the OSD menu of the interface.
Inserted picture size slightly wrong.		
Inserted picture position wrong.		
Camera input picture flickers.	Camera is being tested under fluorescent light (neon).	Test camera under natural light outside the garage.
Camera input picture is bluish.	Protection sticker not removed from camera lens.	Remove protection sticker from lens.
Camera input picture black.	Camera power taken directly from reverse gear lamp.	Use relay or electronic filter to "clean" reverse gear lamp power. Alternatively, camera power can be taken from green wire CAM Power.
Camera input picture has distortion.		
Switching to inserted video does not work after IGN on or vehicle startup- temporary.	Interface has a start-up delay during which, after interface start-up for certain time, there is no switching to inserted video. Required to prevent the factory system from crashing.	In OSD menu of V4, default delay can be shortened time in menu item *StartDelay*, this might especially make sense on installations without connection to CAN-bus. Note: Too short *StartDelay* setting can cause (sporadically) black-screen of factory picture or loss of factory touch-screen control.
Not possible to switch video sources by OEM button.	Function not supported in this vehicle.	Use external keypad for AV-switching.
Not possible to switch video sources by external keypad.	Pressed too short.	For video source switching a longer press of about 2.5 seconds is required.
Interface does not switch to reverse camera input when reverse gear is engaged or does not switch to side camera input(s) when turn signal in on.	Video-input is not enabled.	Enable corresponding inputs (dips 1 to 5 of 8dip bench).
	CAN-bus of vehicle not fully compatible with interface. Function not supported.	Follow the manual for R-gear signal or turn signal from analogue signal.
	Menu item *trigger* in the OSD of the video-input was set to *Wire.*	Switch on corresponding input by external button or 12V to corresponding trigger input. Open OSD-menu of corresponding video input and set the menu item *Trigger* to *CAN bus.*
OSD-menu of interface cannot be accessed/opened.	No inserted video input of interface is active, factory picture is displayed.	Each video input of interface has its own OSD with its own settings. The OSD for each input can only be opened when the input is displayed.

E24 10R-06 5485

Made in China